C.R.I. PUMPS
Pumping trust. Worldwide.

C.R.I. SUBMERSIBLE MOTORS-60Hz

An ISO 9001 & ISO 14001 Company

* For specific models only.

AN ISO 9001 : 2000 & ISO 14001 : 2004 COMPANY
CERTIFIED BY BIS

C.R.I. PUMPS
Pumping trust. Worldwide.

Vision, Mission and Values

To be the industry leader providing best - in - class fluid management solutions to individual and institutional customers and societies in our chosen markets.

We will achieve this through our dedicated efforts to enhance the welfare of all our stakeholders and by living by our values of **commitment, reliability** and **innovation.**

C.R.I. PUMPS

THE BEGINNING

of C.R.I., way back in 1961, was a resolute attempt to produce a few irrigation equipments using the limited facilities of an in-house foundry. Eventually the founder's dream was coming true as the small production unit he started kept growing rapidly. Now, after more than five eventful decades, it is an enormous, widely reputed organization, which produces more than 1000 varieties of perfectly engineered pumps and motors and sells its products in numerous countries spread across 6 continents.

C.R.I. IS ONE AMONG

the few pioneers in the world to produce 100% stainless steel submersible pumps. Having achieved a record production capacity of over one million pumps per annum, today C.R.I. is rubbing its shoulders with the best brands in the world, with advanced technology and safety standards as its hallmarks.

THE INFRASTRUCTURE

of C.R.I. is pretty comprehensive with state-of-the-art machineries and a high potential R&D wing, all within its own covered area of 150,000 square metres. The production environment is accredited with ISO 9001 & 14001 certifications. The R&D team always stays in tune with the changing scenario and seldom fails in coming up with outstanding solutions every time.

NEEDLESS TO SAY,

behind this legendary growth lies the untiring, innovative, enthusiastic and dedicated team work. And, of course, a flawlessly maintained value system too. The name C.R.I. itself encapsulates the company's ethos: " Commitment, Reliability, Innovation".

Huge investments on equipments is something inevitable for any industry of our times. And the winners are those who invest with foresight. We were so keen about this fact from our very beginning itself. Reason why our infrastructure can speak volumes on the shape of the future as well as the needs of the present.

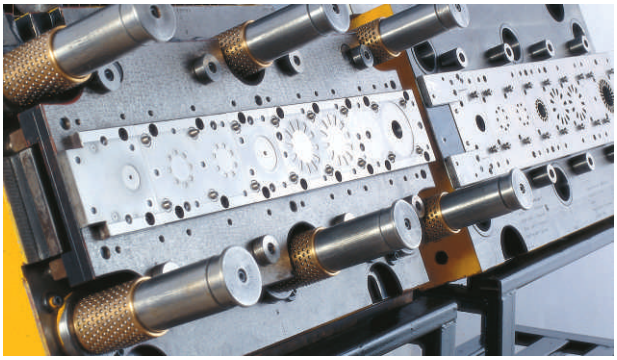

C O N T E N T S

	Page No.
MODEL IDENTIFICATION CODE	05
RESIN FILLED ENCAPSULATED SUBMERSIBLE MOTORS	
4" Motors	
Description, Features and Applications	06
Specifications and Materials of Construction	07
Cross Sectional Drawings	08
Thrust Load Details	09
Dimentional Drawing	10
Dimensions, Technical & Electrical Data	11
6" Motors	
Cross Sectional Drawing	14
Dimensional Drawing	15
Specifications, MOC, Dimensions, Technical & Electrical Data	16
WATER FILLED REWINDABLE SUBMERSIBLE MOTORS	
Description, Features & Applications	18
Cross sectional Drawings	19
Thrust Load Details	22
Dimensional Drawings	23
4" Motors	
Specification and Materials of Construction	24
Dimensions, Technical & Electrical Data	25
6" Motors	
Specifications and Materials of construction	26
Dimensions, Technical & Electrical Data	27
8" Motors	
Specifications and Materials of Construction	31
Dimensions, Technical & Electrical Data	32
Conversion Table	33
Cable Selection Table	34

MODEL IDENTIFICATION CODE

DEEPWELL SUBMERSIBLE MOTOR

X X X S XXX X X

DEEPWELL SUBMERSIBLE MOTOR
W = Water filled
R = Resin filled encapsulated
L = Non-toxic fluid filled

NOMINAL MOTOR DIAMETER
4 = 4", **6** = 6", **8** = 8"
10 = 10"

TYPE OF MATERIALS OF CONSTRUCTION
Type = A/B/N

This digit is only applicable for 1-phase 'R' Series motors without lightning arrestor.

VOLTAGE (This digit is applicable except 230V 1Ph)
D = 220, E = 230, I = 380,
M = 460, P = 575,
V = 220/380, W = 230/380,
X = 110/220, Z = 115/230

PHASE / CONNECTION / CONTROL BOX / FREQUENCY
2 = 1Ph / PSC type / 2 wire / 60Hz
3 = 1 Ph / CSCR / 3 wire / 60Hz
4 = 3 Ph / DOL / 3 wire / 60Hz
6 = 3 Ph / WYE-DELTA / 6 wire / 60Hz

MOTOR POWER (in HP)
05 = 0.5, **10** = 1.0, **15** = 1.5,
75 = 7.5, **150** = 15, **A00** = 100,
A25 = 125

RESIN FILLED ENCAPSULATED SUBMERSIBLE MOTORS

Nominal Diameter : **4" & 6"** 'R' - Series

DESCRIPTION

These motors are hermetically sealed, encapsulated and water lubricated type with removable cable lead out. The stator windings are of enameled copper wire and the wound stator is mounted in a stainless steel shell and is completely protected by a stainless steel cylinder and stator room is pre-filled with resin. The resin filled in the space between the stator & the stainless steel cylinder dissipates heat quickly resulting in longer motor life. Except stator, other portions of the motor is pre-filled with deionised water containing propylene glycol (anti-freeze agent) which serves as coolant & lubricant for rotor, bushes and thrust bearing. If any leakage of water is observed bring to the notice of the distributor. Dynamically balanced rotors of these motors maintain uniform clearance thereby giving better efficiency and increase the life cycle of the water lubricated bush bearings. Specially designed high performance thrust bearings are used that can withstand high axial thrust loads and upthrust loads with minimum wear and tear.

The unique design of thrust bearings creates a wedge of water between the shoe and the disc and thereby it gives better water lubrication and increases the life cycle of the thrust bearings. Pressure equalizing rubber diaphragm is provided to guard the pressure and volume variations of the water inside the motor. Motor sealings are made by means of 'O' rings, shaft seals and sand guard to avoid ingress of well water, sand and fiber particles into the motor. Care should be taken to ensure that the motor does not run when it is not submerged in the water. To prevent the motor from dry running, install water level monitor / dry run preventor. The motor needs a constant flow of water past as its body to keep it at correct operating temperature. Ideally, the motor should be set just below the level at which water enters the bore well. When this level is not ascertained, fit a "flow inducer pipe" over the pumpset to ensure adequate cooling. It is mandatory to install C.R.I Control box for all single phase 3 wire motors. All 3 Ph motors require an adequate motor protection control panel. Mounting dimensions of motors are in accordance with NEMA standards.

Features

- Corrosive resistant stainless steel body.
- Specially designed thrust bearing to withstand high axial thrust loads.
- Copper rotors and low watt loss silicon steel laminations for higher starting torque.
- Higher power factor resulting in lesser power consumption.
- Larger shaft diameter for better power transmission.
- High heat dissipation for better life cycle.

Applications

These prime mover submersible motors are suitable to couple with deepwell submersible pumpends used for

- Irrigation, Domestic water supply
- Fountains
- Industrial water supply
- Pressure boosting units
- Ponds, Gardens
- Sprinkler systems and mining

RESIN FILLED ENCAPSULATED SUBMERSIBLE MOTORS

Nominal Diameter : **4"**

'R' - Series

SPECIFICATIONS

Nominal Diameter	4" (100 mm)
Maximum Outer Diameter	3.78 inches
Power Range	0.33HP to 1.5HP - 2 wire,1 Phase
	0.33HP to 5 HP - 3 wire, 1 Phase
	Incorporated with Thermal overload Protector upto 1.5HP - 1Phase
	Incorporated with Lighting arrestor upto 5HP - 1 Phase
	0.5HP to 7.5HP - 3 wire, 3 Phase
Speed	3450 rpm
Versions	1 Phase - 220, 230 V, 60 Hz, A.C. Supply
	3 Phase - 220, 230, 380, 440 & 460V, 60 Hz, A.C. Supply
Class of Insulation	F
Degree of Protection	IP58
Direction of Rotation	CCW - 1 Phase, Electrically Reversible - 3 Phase
Type of Duty	S1 (continuous)
Down Thrust Load	0.33 to 2HP - 800 Lbs / 3500 N
	3 to 7.5HP - 1500 Lbs / 6500 N
Minimum Cooling Flow Along the Motor	0.25 ft/sec
Maximum Temperature of Liquid	91.4°F(33°C)
Starts per Hour	20 times
Shaft	Splined as per NEMA standard
Mounting Standard	NEMA standard
Method of Starting	1 Phase - Capacitor start Capacitor Run (CSCR)
	Permanent Split Capacitor (PSC)
	3 Phase - Direct On Line (DOL)
Cable Leadout	2 & 3 Wire Removable type PVC/ Rubber insulated flat Cable/Individual Leads

MATERIALS OF CONSTRUCTION

Part Name	Type-A
Housings Shell	S.S - 304
Stator Shell	S.S - 304
Shaft Extension	S.S - 304
Bearing Bush	Graphite Carbon
Thrust Bearing/Pad	S.S - 420 / Graphite Carbon
Capacitor Chamber	Thermoplastic (2 wire)
Motor Base	S.S - 304 (3 wire)
'O' Ring	Nitrile rubber (NBR)
Diaphragm	Nitrile rubber (NBR)

In view of continuous developments, the Information / descriptions / Specifications / illustrations are subject to change without notice.

RESIN FILLED ENCAPSULATED SUBMERSIBLE MOTORS

Nominal Diameter : **4"** ‘R’ - Series

Exploded view of 2 wire motor

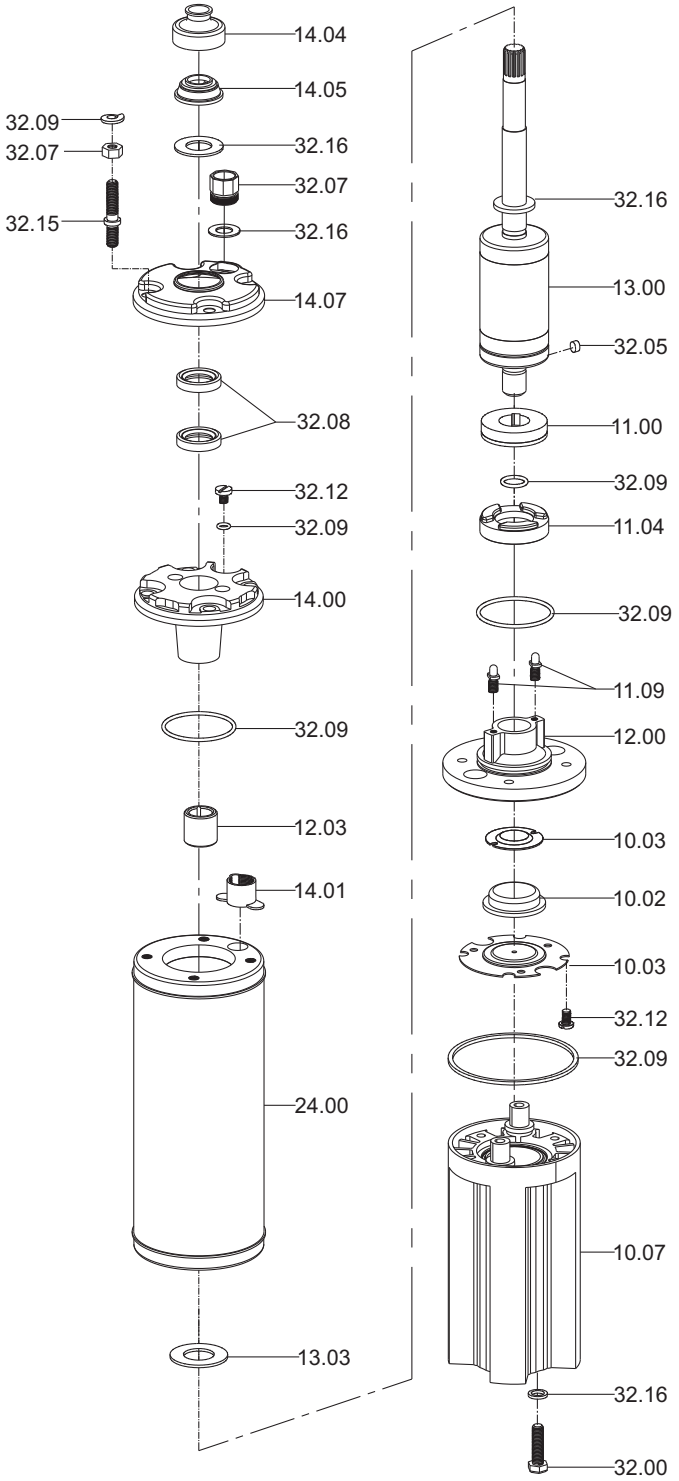

Part No.	Part Name
10.02	Diaphragm
10.03	Diaphragm Bottom Plate
10.07	Capacitor Chamber
11.00	Thrust Base
11.04	Thrust Pad
11.09	Rocker Screw
12.00	Lower Housing
12.03	Bush-Carbon
13.00	Rotor
13.03	Up Thrust Washer
14.00	Upper Housing
14.01	Cable Grommet
14.04	Sand Guard-Rubber
14.05	Sand Guard-SS/Bakelite
14.07	Upper Housing Shell
24.00	Motor Frame
32.00	Bolt
32.05	Key
32.07	Nut
32.08	Oil Seal
32.09	O-ring
32.12	Screw
32.15	Stud
32.16	Washer

In view of continuous developments, the information / descriptions / specifications / illustrations are subject to change without notice.

RESIN FILLED ENCAPSULATED SUBMERSIBLE MOTORS

Nominal Diameter : **4"**

'R' - Series

Exploded view of 3 wire motor

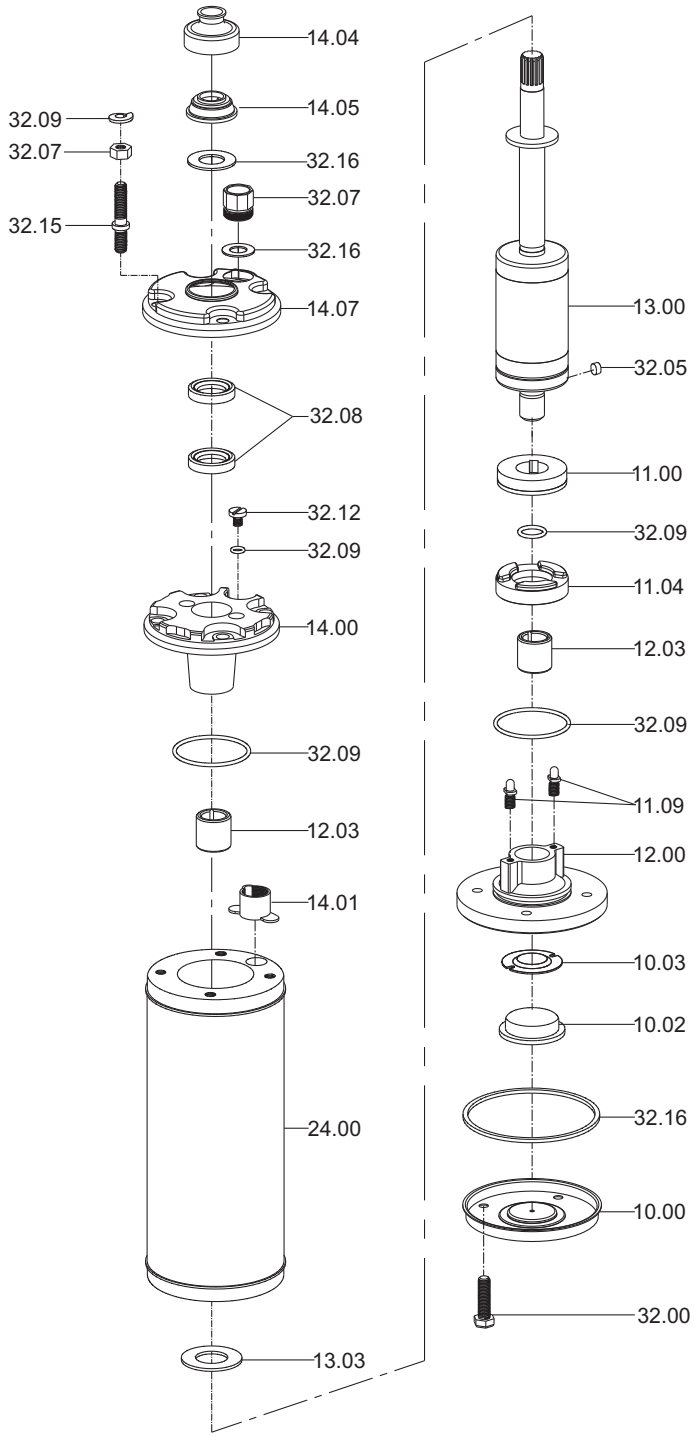

Part No.	Part Name
10.00	Motor Base
10.02	Diaphragm
10.03	Diaphragm Bottom plate
11.00	Thrust Base
11.04	Thrust Pad
11.09	Rocker Screw
12.00	Lower Housing
12.03	Bush-Carbon
13.00	Rotor
13.03	Up Thrust Washer
14.00	Upper Housing
14.01	Cable Grommet
14.04	Sand Guard-Rubber
14.05	Sand Guard-SS/Bakelite
14.07	Upper Housing Shell
24.00	Motor Frame
32.00	Bolt
32.05	Key
32.07	Nut
32.08	Oil Seal
32.09	O-ring
32.12	Screw
32.15	Stud
32.16	Washer

In view of continuous developments, the information / descriptions / specifications / illustrations are subject to change without notice.

RESIN FILLED ENCAPSULATED SUBMERSIBLE MOTORS

Nominal Diameter : **4"** 'R' - Series

Exploded view of motors (3 HP & above)

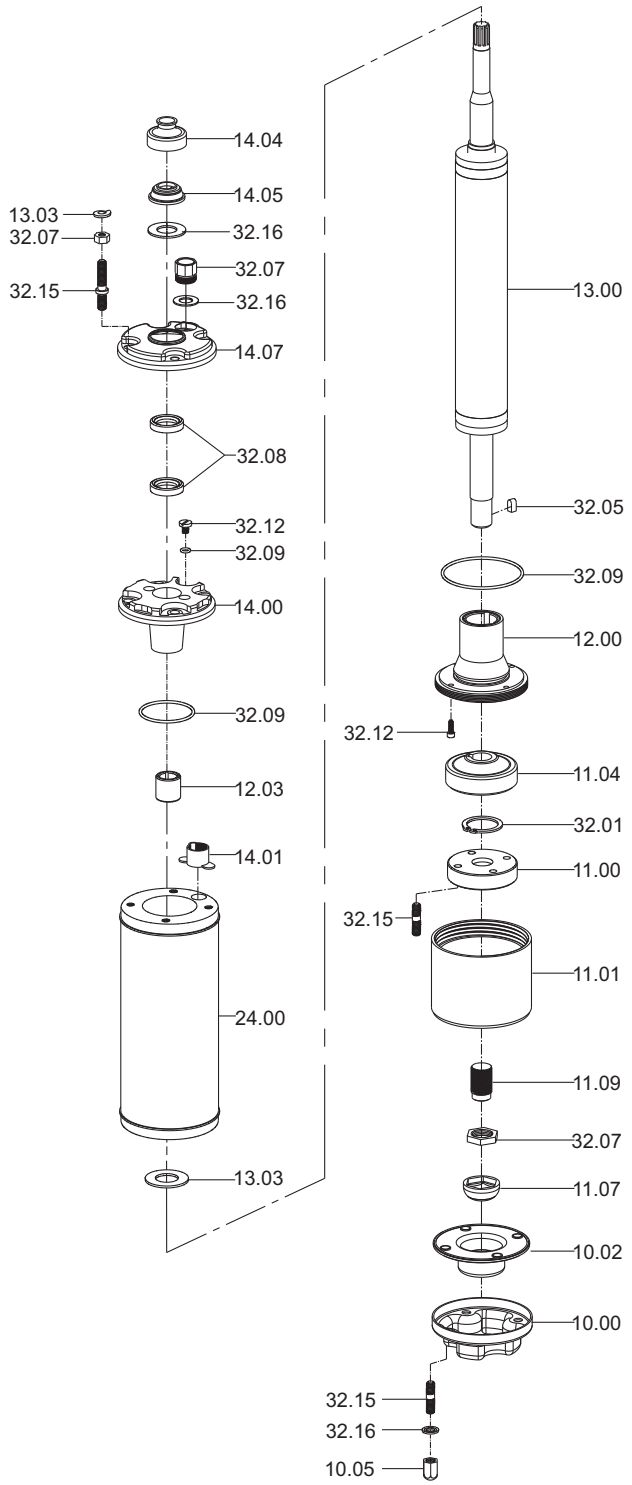

Part No.	Part Name
10.00	Motor Base
10.02	Diaphragm
10.05	Doom Nut
11.00	Thrust Base
11.01	Thrust Base Housing
11.04	Thrust Pad
11.07	Rocker Cap
11.09	Rocker Screw
12.00	Lower Housing
13.00	Rotor
13.03	Up Thrust Washer
14.00	Upper Housing
14.04	Sand Guard-Rubber
14.05	Sand Guard-SS/Bakelite
14.13	Cable Plug Shell
14.14	Cable Clamp
24.00	Motor Frame
32.01	Circlip
32.05	Key
32.07	Nut
32.08	Oil Seal
32.09	O-ring
32.12	Screw
32.15	Stud
32.16	Washer
14.01	Cable Grommet
12.03	Bush - Carbon

In view of continuous developments, the information / descriptions / specifications / illustrations are subject to change without notice.

RESIN FILLED ENCAPSULATED SUBMERSIBLE MOTORS

Nominal Diameter : **4" & 6"** 'R' - Series

Thrust Load Details

4"- 2 & 3 Wire Motors **6" Motors**

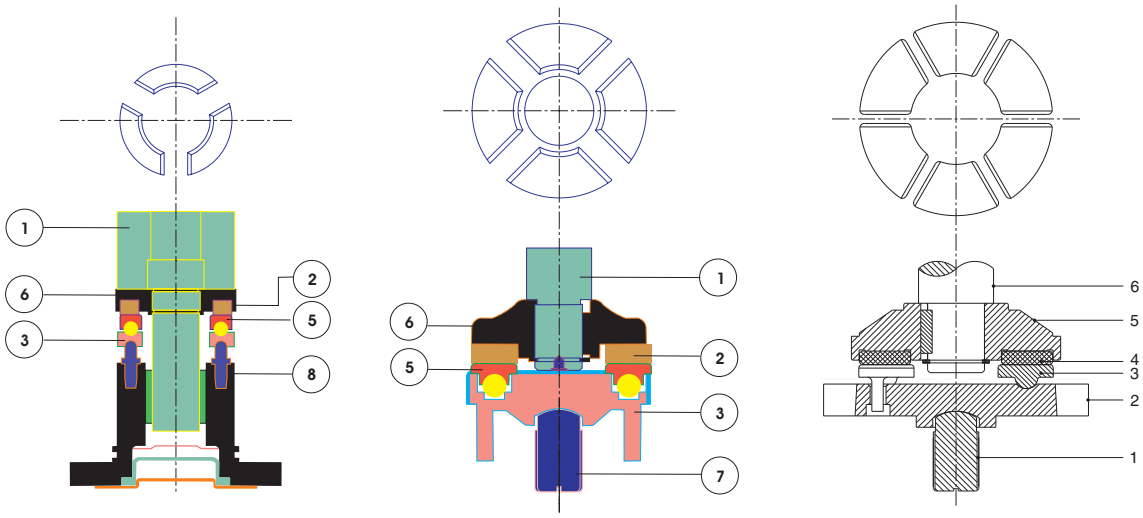

R - 1 **R - 2**

PART No.	PART NAME
1.	Shaft
2.	Carbon Pad
3.	Thrust Base Plate
4.	Pivot Shoe
5.	Thrust Pad Plate
6.	Rocker Screw
7.	Rocker Pin

Motor Nominal Dia	4"	Bearing Type	No.of Shoes	Down Thrust Load
4"	0.5 HP to 2.0 HP	R - 1	3	3000N / 650 lbs
4"	3.0 HP to 5.0 HP	R - 2	4	6500N / 1500 lbs
6"	7.5 HP to 30 HP	R - 3	6	15500N / 3500 lbs

SHAFT EXTENSION HEIGHT AND FREE END PLAY

Motor Nominal Dia	Nominal shaft extension height in mm	Dimension shaft extension height in mm	Free end play in mm	
			min	max
4"	38.00 + 0.30 -0.00	38.0 to 38.30	1.0	2.0
6"	72.80 + 0.00 -0.10	72.70 to 72.80	1.0	2.0

During every servicing, the free end play must be checked with the above values. If the shaft extension height measurement differs, the motor thrust bearing could possibly be damaged and should be replaced.

In view of continuous developments, the Information / descriptions / Specifications / illustrations are subject to change without notice.

RESIN FILLED ENCAPSULATED SUBMERSIBLE MOTORS

Nominal Diameter : **4"** ‘R’ - Series

Dimensional Drawings

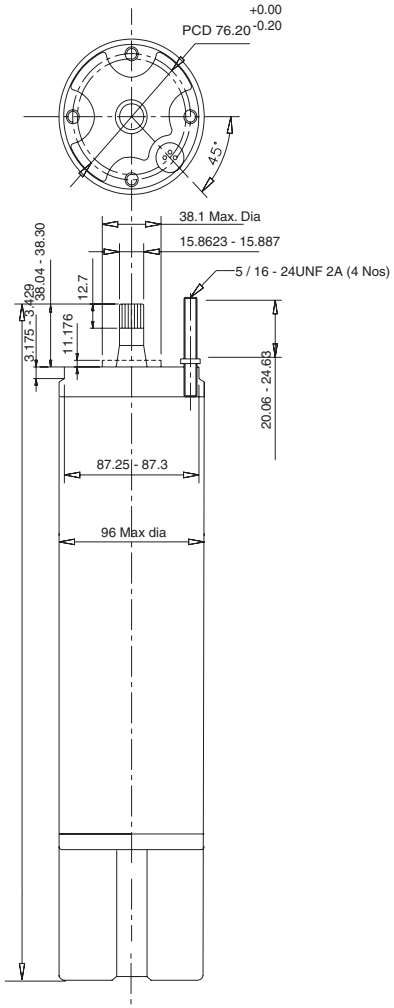

2 - Wire Motor

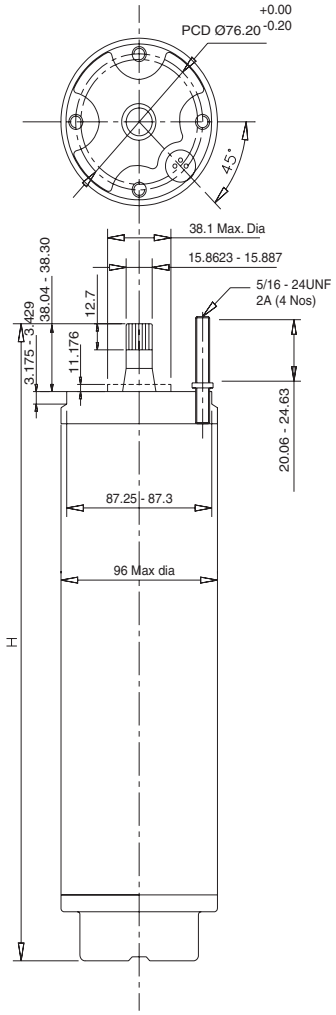

3 - Wire Motor

All dimensions are in mm. Splined shaft 14 Teeth - module 1.5875
Pressure angle 30° A.N.S.I.B - 92 - 1 - 1970 Coupling Class 5

RESIN FILLED ENCAPSULATED SUBMERSIBLE MOTORS

Nominal Diameter : **4"**

'R' - Series

220/230V, SINGLE PHASE

APPROX. DIMENSIONS(Inches) & WEIGHTS (lbs)

Motor Model		HP	Lead out Cable (mm²)	Outer Diameter	Height	Nett Weight	Capacitor Values (µf)	
							Start (230V)	Run(440V)
220 V	230V			2 Wire Motors				
R4A-03-2D	R4A-03-2	0.33	2.5	3.78	17.2	24.2	-	30
R4A-05-2D	R4A-05-2	0.50	2.5	3.78	17.9	25.3	-	30
R4A-07-2D	R4A-07-2	0.75	2.5	3.78	19.0	28.4	-	40
R4A-10-2D	R4A-10-2	1.0	2.5	3.78	20.0	30.8	-	45
R4A-15-2D	R4A-15-2	1.5	2.5	3.78	21.5	35.2	-	50
				3 Wire Motors				
R4A-03-3D	R4A-03-3	0.33	2.5	3.78	11.2	22.7	60/80	30
R4A-05-3D	R4A-05-3	0.50	2.5	3.78	12.0	24.7	80/100	30
R4A-07-3D	R4A-07-3	0.75	2.5	3.78	13.0	27.3	80/100	40
R4A-10-3D	R4A-10-3	1.0	2.5	3.78	15.5	25	100/120	45
R4A-15-3D	R4A-15-3	1.5	2.5	3.78	17.5	28.8	120/150	50
R4A-20-3D	R4A-20-3	2.0	2.5	3.78	19.5	36.3	120/150	50
R4A-30-3D	R4A-30-3	3.0	4.0	3.78	26.4	55.7	200/250	36+36
R4A-50-3D	R4A-50-3	5.0	4.0	3.78	32.3	71	250/300	50+50

220V, SINGLE PHASE (2 / 3 WIRE)

TECHNICAL & ELECTRICAL DATA

MODEL	HP	SF	RATED		MAX. S.F.		Efficiency %			Power Factor %			Locked Rotor (Amps)	Max. Down Thrust Load (lbs)
			Amps	W	Amps	W	S.F	F.L.	3/4	S.F	F.L	3/4		
R4A-03-3D	0.33	1.75	3.6	480	5.0	738	60	52	45	67	64	50	19	800
R4A-05-3D	0.5	1.6	5.1	640	6.5	948	62.5	58	50	66	57	52	23	800
R4A-07-3D	0.75	1.5	6.8	888	8.1	1250	66	63	53	70	59.5	52	29	800
R4A-10-3D	1	1.4	8.2	1158	9.8	1500	70	65	56	70	68	63	35	800
R4A-15-3D	1.5	1.3	10.3	1620	13.4	2080	69.5	68	64	70.5	71.5	67.5	55	800
R4A-20-3D	2	1.25	11.5	2100	14.3	2680	70	71.5	68	85	83	72	66	800
R4A-30-3D	3	1.15	15.2	3160	17.3	3600	70.5	70	67	95	94	90	80	1500
R4A-50-3D	5	1.15	25	5180	28	5940	72	71.5	69.5	96	94	91	120	1500

230V, SINGLE PHASE (2 / 3 WIRE)

TECHNICAL & ELECTRICAL DATA

MODEL	HP	SF	RATED		MAX. S.F.		Efficiency %			Power Factor %			Locked Rotor (Amps)	Max. Down Thrust Load (lbs)
			Amps	W	Amps	W	S.F	F.L.	3/4	S.F	F.L	3/4		
R4A-03-3	0.33	1.75	3.8	495	4.5	730	60	50.5	55.1	70.6	58	48.5	19	800
R4A-05-3	0.50	1.6	5	640	6	940	63.5	57.5	51	73	63.2	58.5	22.5	800
R4A-07-3	0.75	1.5	6	880	7.5	1250	67	60	57	77.5	70	64.2	27	800
R4A-10-3	1	1.4	8.2	1150	9.6	1490	70	63	59	77	71.5	67.5	36	800
R4A-15-3	1.5	1.3	10.3	1630	13.5	2080	69	67.5	63	67	69	65	55	800
R4A-20-3	2	1.25	11.5	2100	14.2	2680	70	71.4	69.5	82	80	74	63	800
R4A-30-3	3	1.15	14.5	3150	17.5	3620	69.5	70	68.5	95.4	94.5	92	83	1500
R4A-50-3	5	1.15	24	5200	27.5	5950	71.5	72	70.2	94.1	94.2	91.2	115	1500

The 6th digit of the model number '3' denotes 3 wire motor, and it will be replaced with '2' in case of 2 wire motor.
Note : 2 wire motor upto 1.5 HP

In view of continuous developments, the Information / descriptions / Specifications / illustrations are subject to change without notice.

RESIN FILLED ENCAPSULATED SUBMERSIBLE MOTORS

Nominal Diameter : **4"** 'R' - Series

220/230V THREE PHASE

APPROX . DIMENSIONS(Inches) & WEIGHTS (lbs)

Motor Model	HP	Lead Out Cable (mm²)	Outer Diameter	Height	Nett Weight
R4A-05-4D	0.5	2.5	3.78	14.1	23.0
R4A-07-4D	0.75	2.5	3.78	15.3	25.2
R4A-10-4D	1.0	2.5	3.78	16.2	27.2
R4A-15-4D	1.5	2.5	3.78	17.5	30.0
R4A-20-4D	2.0	2.5	3.78	19.2	37.0
R4A-30-4D	3.0	4.0	3.78	23.6	48.5
R4A-40-4D	4.0	4.0	3.78	25.9	55.5
R4A-50-4D	5.0	4.0	3.78	27.5	66.0
R4A-55-4D	5.5	4.0	3.78	27.5	66.2
R4A-75-4D	7.5	6.0	3.78	30.0	75.0

220V, THREE PHASE 3 WIRE — TECHNICAL & ELECTRICAL DATA

MODEL	HP	SF	RATED		MAX. S.F.		Efficiency %			Power Factor %			Locked Rotor Amps	Thrust Capacity (lbs)
			Amps	W	Amps	W	S.F	F.L.	3/4	S.F	F.L	3/4		
R4A-15-4D	1.5	1.30	5.4	1500	7.0	1920	74	73	70	72	73	70	35	800
R4A-20-4D	2.0	1.25	7.1	2064	8.8	2540	74	73	71	76	76.5	73	48	800
R4A-30-4D	3.0	1.15	10.5	3080	11.8	3450	73	71.5	70	76	77	70	65	1500
R4A-40-4D	4.0	1.15	14.2	4080	16.3	4680	73	73.5	72	75.5	76	70	80	1500
R4A-50-4D	5.0	1.15	17.2	5120	19.8	5860	72	71.5	70	77.5	78	71	110	1500
R4A-55-4D	5.5	1.15	18.5	5280	21.2	6040	75	74.5	72	75	75	72	128	1500

230V, THREE PHASE 3 WIRE — TECHNICAL & ELECTRICAL DATA

MOTOR MODEL	HP	SF	RATED		MAX. S.F.		Efficiency %			Power Factor %			Locked Rotor Amps	Thrust Capacity (lbs)
			Amps	W	Amps	W	S.F	F.L.	3/4	S.F	F.L	3/4		
R4A-15-4E	1.5	1.30	5.2	1500	6.3	1920	74	73	70	72	73	70	35	800
R4A-20-4E	2.0	1.25	6.9	2064	8.8	2540	74	73	71	76	76.5	73	48	800
R4A-30-4E	3.0	1.15	10.2	3080	11.7	3450	73	71.5	70	76	77	70	65	1500
R4A-40-4E	4.0	1.15	13.5	4080	15.5	4680	73	73.5	72	75.5	76	70	80	1500
R4A-50-4E	5.0	1.15	17.0	5120	19.5	5860	72	71.5	70	77.5	78	71	110	1500
R4A-55-4E	5.5	1.15	17.5	5280	20.1	6040	75	74.5	72	75	75	72	128	1500

The last digit of the model number denotes voltage (D = 220V, E = 230V, I = 380V, M = 460V).

RESIN FILLED ENCAPSULATED SUBMERSIBLE MOTORS

Nominal Diameter : **4"**

'R' - Series

380V, THREE PHASE

APPROX. DIMENSIONS(Inches) & WEIGHTS (lbs)

Motor Model	HP	Lead Out Cable (mm²)	Outer Diameter	Height	Nett Weight
R4A-05-4I	0.5	2.5	3.78	14.1	23
R4A-07-4I	0.75	2.5	3.78	15.3	25.2
R4A-10-4I	1	2.5	3.78	16.2	27.2
R4A-15-4I	1.5	2.5	3.78	17.7	30.0
R4A-20-4I	2	2.5	3.78	19.2	37.0
R4A-30-4I	3	2.5	3.78	23.6	48.5
R4A-50-4I	5	2.5	3.78	27.5	66.0
R4A-55-4I	5.5	2.5	3.78	27.5	66.9
R4A-75-4I	7.5	4.0	3.78	31.5	80.0

380V, THREE PHASE 3 WIRE — **TECHNICAL & ELECTRICAL DATA**

MODEL	HP	SF	RATED		MAX. S.F.		Efficiency %			Power Factor %			Locked Rotor Amps	Thrust Capacity (lbs)
			Amps	W	Amps	W	S.F	F.L.	3/4	S.F	F.L	3/4		
R4A-07-4I	0.75	1.50	1.8	824	2.5	1152	72	67	66	78	77	70	11	800
R4A-10-4I	1.0	1.40	2.3	1088	3.1	1472	73	70	66	77	76	72	16	800
R4A-15-4I	1.5	1.30	3	1504	3.6	1892	76	74	73	80	79	73	20	800
R4A-20-4I	2.0	1.25	4.3	2128	4.9	2500	73	72	69	71	79	73	28	800
R4A-30-4I	3.0	1.15	5.8	3024	6.7	3398	75	73	72	80	78	74	37	1500
R4A-50-4I	5.0	1.15	9.4	4960	10.8	5600	76	76	73	82	80	76	63	1500
R4A-55-4I	5.5	1.15	10.8	5280	12.2	6040	75	76	74	75	74	72	70	1500

460V, THREE PHASE

APPROX. DIMENSIONS (Inches) & WEIGHTS (lbs)

Motor Model	HP	Lead Out Cable (mm²)	Outer Diameter	Height	Nett Weight
R4A-05-4M	0.5	2.5	3.78	14.0	23.2
R4A-07-4M	0.75	2.5	3.78	15.3	25.5
R4A-10-4M	1	2.5	3.78	16.2	27.5
R4A-15-4M	1.5	2.5	3.78	17.7	30.6
R4A-20-4M	2	2.5	3.78	19.2	38
R4A-30-4M	3	2.5	3.78	21.2	49
R4A-50-4M	5	2.5	3.78	26.3	67
R4A-55-4M	5.5	4.0	3.78	28.0	68
R4A-75-4M	7.5	4.0	3.78	35.3	81

460V, THREE PHASE 3 WIRE — **TECHNICAL & ELECTRICAL DATA**

MODEL	HP	SF	RATED		MAX. S.F.		Efficiency %			Power Factor %			Locked Rotor Amps	Thrust Capacity (lbs)
			Amps	W	Amps	W	S.F	F.L.	3/4	S.F	F.L	3/4		
R4A-07-4M	0.75	1.50	1.6	816	1.9	1168	71	68	64	77	70	59	10	800
R4A-10-4M	1.0	1.40	2	1088	2.4	1458	72	70	69	77	72	62	12	800
R4A-15-4M	1.5	1.30	2.8	1472	3.2	1872	77	75	74	74	72	65	16	800
R4A-20-4M	2.0	1.25	3.7	2160	4.2	2668	70	70	68	80	74	70	23	800
R4A-30-4M	3.0	1.15	5	2976	5.7	3390	75	74	72	77	76	71	30	1500
R4A-50-4M	5.0	1.15	8.1	5040	9.0	5792	73	75	72	80	78	74	50	1500
R4A-75-4M	7.5	1.5	12.2	7320	14.0	8400	75	75.5	73	75.5	75	72	78	1500

In view of continuous developments, the Information / descriptions / Specifications / illustrations are subject to change without notice.

RESIN FILLED ENCAPSULATED SUBMERSIBLE MOTORS

Nominal Diameter : **6"** ‘R’ - Series

Cross Sectional Drawings

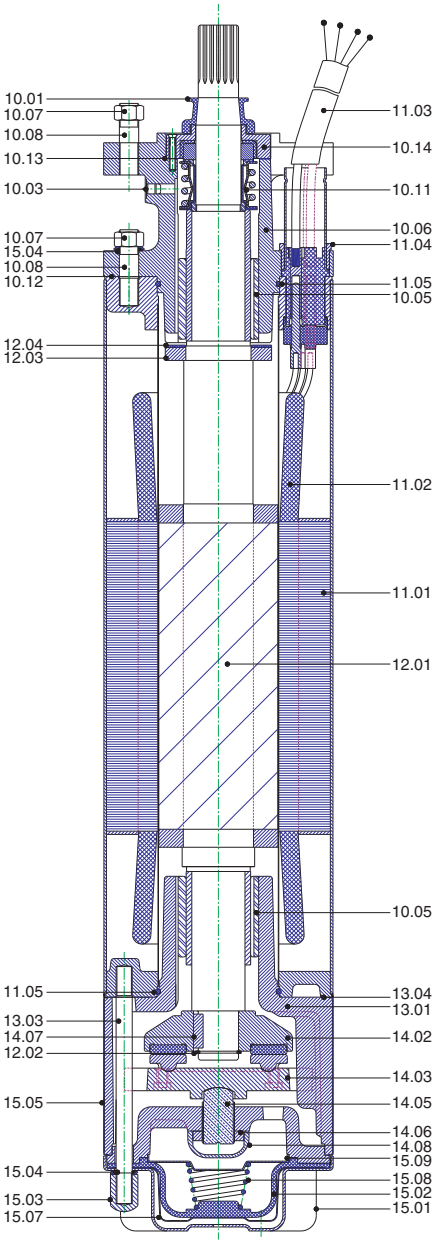

Part No.	Part Name
10.01	Sand Guard
10.03	Water Filling Plug
10.05	Bush
10.06	Upper Housing
10.07	Nut
10.08	Stud
10.11	Mechanical Seal
10.12	Upper Housing Gasket
10.13	Rubber Gasket
10.14	Seal Guide Sleeve
11.01	Stator
11.02	Stator Winding
11.03	Cable
11.04	Cable Connector Sleeve
12.01	Rotor
12.02	Circlip
12.03	Counter Thrust Pad
12.04	Teflon Ring
13.01	Lower Housing
13.03	Tie Bolt / Tie Rod
13.04	Lower Housing Gasket
14.02	Thrust Bearing Pad
14.03	Thrust Bearing Base
14.05	Rocker Screw
14.06	Rocker Screw Nut
14.07	Pad Key
15.01	Motor Base
15.02	Diaphragm
15.03	Doom Nut
15.04	"O" Ring
15.05	SS Shell
15.07	Motor Base Inner Plate
15.08	Diaphragm Spring
15.09	Spring Guide Plate

MOUNTING DIMENSIONS ARE IN ACCORDANCE WITH THE NEMA STANDARD

RESIN FILLED ENCAPSULATED SUBMERSIBLE MOTORS

Nominal Diameter : **6"**

'R' - Series

Dimensional Drawings

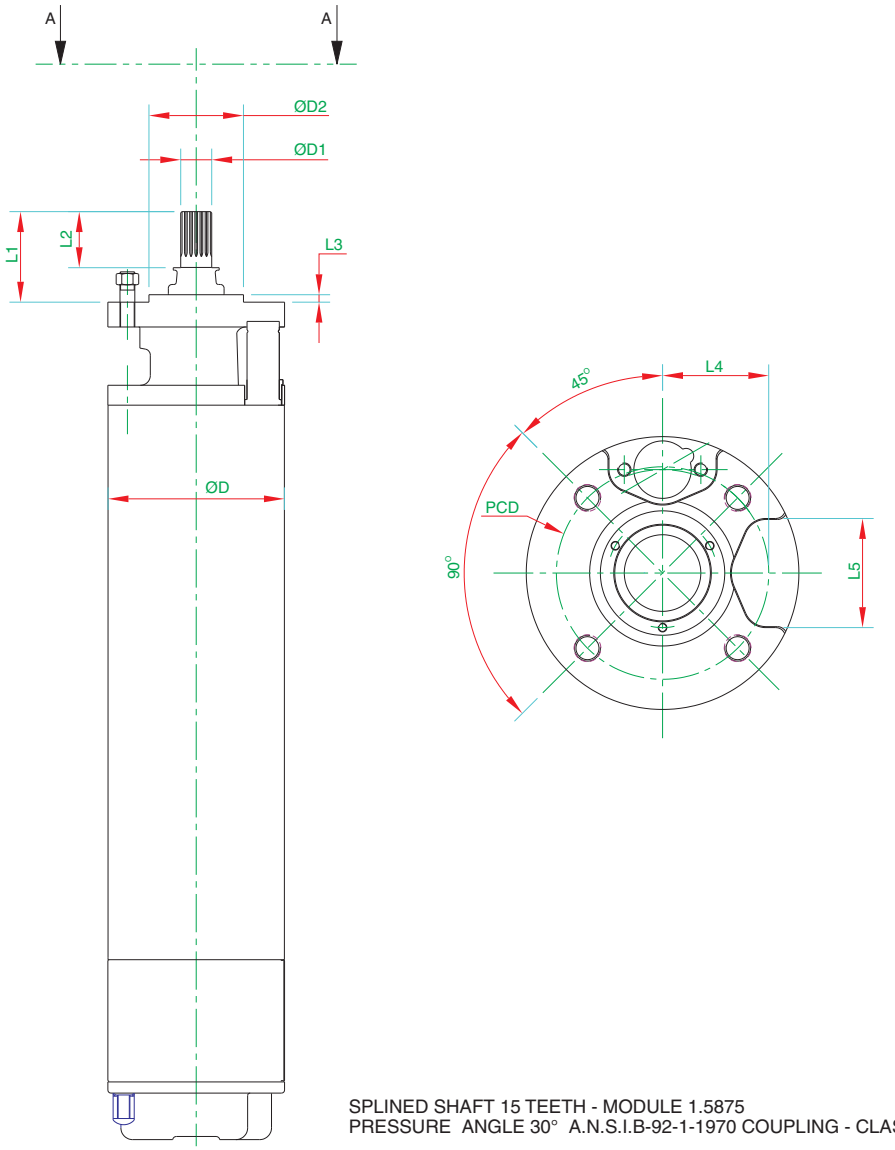

SPLINED SHAFT 15 TEETH - MODULE 1.5875
PRESSURE ANGLE 30° A.N.S.I.B-92-1-1970 COUPLING - CLASS 5

MOTOR DIA	DIMENSIONS IN mm								
	L1	L2	L3	L4	L5	ØD	ØD1	ØD2	PCD
6"	73.0	23.0	6.0	60.0	57.0	Ø143.0	Ø25.0h8	Ø76.20h7	111.0

In view of continuous developments, the Information / descriptions / Specifications / illustrations are subject to change without notice.

RESIN FILLED ENCAPSULATED SUBMERSIBLE MOTORS

Nominal Diameter : **6"** 'R' - Series

SPECIFICATIONS

Nominal Diameter	6" (150 mm)
Maximum Outer Diameter	5.62 inches
Power Range	7.5 HP to 30HP
Speed	3450 rpm
Versions	3 phase - 220V, 380V & 460V, 60Hz, A.C. supply
Degree of Protection	IP 68
Class of Insulation	F
Direction of Rotation	Electrically Reversible-3 phase
Type of Duty	S1 (Continuous)
Max. Down Thrust Load	3500 lbs / 15500 N
Minimum Cooling Flow Along the Motor	0.15m / sec
Maximum Temperature of Liquid	91.4°F (33°C)
Starts per Hour	20 times
Shaft	Splined as per NEMA standard
Method of Starting	7.5 HP to 30 HP Direct On line (D.O.L.)
Cable Leadout	3/4 wire removable type. PVC/Rubber insulated flat cable / Individual leads.

MATERIALS OF CONSTRUCTION

Part Name	Type-A
Lower housing shell	S.S - 304
Seal Housings	C.I.
Stator shell	S.S - 304
Shaft Extension	S.S - 304
Bearing Bush	Graphite Carbon
Thrust Bearing/Pad	S.S 420 / Graphite Carbon
Motor Base	S.S - 304
Mechanical seal	Carbon Ceramic
Diaphragm	NBR

220/230/380/460V, THREE PHASE

APPROX. DIMENSIONS (Inches) & WEIGHTS (lbs)

Motor Model	HP	Lead Out Cable (mm^2)	Outer Diameter	Height	Nett Weight
R6B-75-4D	7.5	4.0	5.62	29.4	104.6
R6B-100-4D	10	6.0	5.62	31.8	123.2
R6B-125-4D	12.5	6.0	5.62	33.8	140.0
R6B-150-4D	15	10.0	5.62	36.3	151.8
R6B-200-4D	20	10.0	5.62	39.5	168.3
R6B-250-4D	25	10.0	5.62	42.8	181.2
R6B-300-4D	30	10.0	5.62	45.1	204.4

220V, THREE PHASE

TECHNICAL & ELECTRICAL DATA

MODEL	HP	SF	RATED	MAX. S.F.	Efficiency %			Power Factor %			Locked Rotor Amps	Thrust Capacity (lbs)
			Amps	Amps	S.F	F.L.	3/4	S.F	F.L	3/4		
R6B-75-4D	7.5	1.15	23.5	26.5	79	78	77	82	80	78	-	3500
R6B-100-4D	10	1.15	30	33	81	78	77	85	82	80	-	3500
R6B-150-4D	15	1.15	43.5	49	79	78	75	88	87	85	-	3500
R6B-200-4D	20	1.15	57	67	82	81	79	85	83	81	-	3500
R6B-250-4D	25	1.15	70	79	81	80	77	88	86	83	-	3500
R6B-300-4D	30	1.15	82	91	83	82	78	88	87	84	-	3500

The last digit of the model number denotes voltage (D = 220V, E = 230V, I = 380V, M = 460V).

RESIN FILLED ENCAPSULATED SUBMERSIBLE MOTORS

Nominal Diameter : **6"**

'R' - Series

230V, THREE PHASE

TECHNICAL & ELECTRICAL DATA

MODEL	HP	SF	RATED	MAX. S.F.	Efficiency %			Power Factor %			Locked Rotor Amps	Thrust Capacity (lbs)
			Amps	Amps	S.F	F.L.	3/4	S.F	F.L	3/4		
R6B-75-4-E	7.5	1.15	22.5	25.3	79	78	77	82	80	78	-	3500
R6B-100-4E	10	1.15	29	31.5	81	78	77	85	82	80	-	3500
R6B-150-4E	15	1.15	41.6	47	79	78	75	88	87	85	-	3500
R6B-200-4E	20	1.15	54.5	64	82	81	79	85	83	81	-	3500
R6B-250-4E	25	1.15	67	75.5	81	80	77	88	86	83	-	3500
R6B-300-4E	30	1.15	78.4	87	83	82	78	88	87	84	-	3500

380V, THREE PHASE

TECHNICAL & ELECTRICAL DATA

MODEL	HP	SF	RATED	MAX. S.F.	Efficiency %			Power Factor %			Locked Rotor Amps	Thrust Capacity (lbs)
			Amps	Amps	S.F	F.L.	3/4	S.F	F.L	3/4		
R6B-75-4I	7.5	1.15	13.5	15	81.5	80	77	85	84	82	58	3500
R6B-100-4I	10	1.15	19	21	79	79	78	85	84	82	83	3500
R6B-150-4I	15	1.15	25	27	81.5	81	79	91	89	86	136	3500
R6B-200-4I	20	1.15	33	37	82	81	79	91	90	87	175	3500
R6B-250-4I	25	1.15	42	47	82	81	79	88	85	82	220	3500
R6B-300-4I	30	1.15	50	55	83	82	80	91	89	82	306	3500

460V, THREE PHASE

TECHNICAL & ELECTRICAL DATA

MODEL	HP	SF	Full Load Current (SF)				Efficiency %				Power Factor %				Locked Rotor Amps	Max.Down Thrust Load
			S.F.	F.L.	3/4	1/2	S.F.	F.L.	3/4	1/2	S.F.	F.L.	3/4	1/2		lbs
R6B-75-4M	7.5	1.15	13	11.5	8.6	6	79	79	77	76	84	83	81	80	46	3500
R6B-100-4M	10	1.15	16.5	14.5	12.5	9.5	80.	79	78	76	83	82	79	77	80	3500
R6B-150-4M	15	1.15	24	21.5	17.5	12	81	81	78	74	83	81	78	76	120	3500
R6B-200-4M	20	1.15	31.5	27.5	21.5	16	82	82	81	78	86	85	83	78	172	3500
R6B-250-4M	25	1.15	39	34	27.5	23	82.5	82.5	80	79	84	84	80	76	195	3500
R6B-300-4M	30	1.15	46	39.5	30	21	83	83	81.5	78	83	83	80	76	220	3500

In view of continuous developments, the Information / descriptions / Specifications / illustrations are subject to change without notice.

WATER FILLED REWINDABLE SUBMERSIBLE MOTORS

Nominal Diameter : **4", 6" & 8"** 'W' - Series

DESCRIPTION

These motors are eco-friendly wet type, water filled rewindable. The stator windings are of water proof synthetic film insulated copper winding wires. It features water lubricated thrust and journal bearings. Motor is pre-filled with clear, cold, pure, fresh, filtered water. However, on request motors can be pre-filled with water and propylene glycol (Anti-freeze agent) for places where the temperature is below the freezing conditions. Before commissioning, ensure the pre-filled level of water inside the motor. If any loss of volume is noticed, top up with clear, cold, pure, fresh, filtered water, through water filling plugs / valves provided in the upper housing. Where the use of anti-freeze agent mixed water is not allowed for special applications, these motors can also be filled with clear, cold, pure, fresh, filtered water and operated. Dynamically balanced rotors of these 'W' series motors maintain uniform clearance thereby giving better efficiency and increase the life cycle of the water lubricated bush bearings. Specially designed high performance thrust bearings are used that can withstand high axial thrust loads and up thrust loads with minimum wear and tear.

The unique design of thrust bearings creates a wedge of water between the shoe and the disc, and thereby it gives better water lubrication and increases the life cycle of the thrust bearings. Pressure equalizing rubber diaphragm is provided to guard the pressure and volume variations of the water inside the motor. Motor sealings are made by means of 'O' rings, shaft seals and sand guard to avoid ingress of well water. sand and fiber particles into the motor. Care should be taken to ensure that the motor does not run when it is not submerged in the water, To prevent the motor from dry running, install water level monitor/dry run preventor. The motor needs a constant flow of water past its body to keep it at correct operating temperature. Ideally, the motor should be set just below the level at which water enters the bore well. When this level is not ascertained, fit a " Flow inducer pipe" over the pumpset to ensure adequate cooling. It is mandatory to install a C.R.I. Control box for all single phase 3 wire motors. Mounting dimensions of motors are in accordance with NEMA standards.

Features

- Corrosive resistant stainless steel body.
- Specially designed thrust bearing to withstand high axial thrust loads.
- Copper rotors and low watt loss silicon steel laminations for higher starting torque.
- Higher power factor resulting in lesser power consumption.
- Larger shaft diameter for better power transmission.
- High heat dissipation for better life cycle.

Applications

These prime mover submersible motors are suitable to couple with deepwell submersible pumpends used for

- Irrigation, Domestic water supply
- Fountains
- Industrial water supply
- Pressure boosting units
- Ponds, Gardens
- Sprinkler systems and mining

WATER FILLED REWINDABLE SUBMERSIBLE MOTORS

Nominal Diameter : **4" (4WN)** 'W' - Series

Exploded view of 4" W Series (Lower HP)

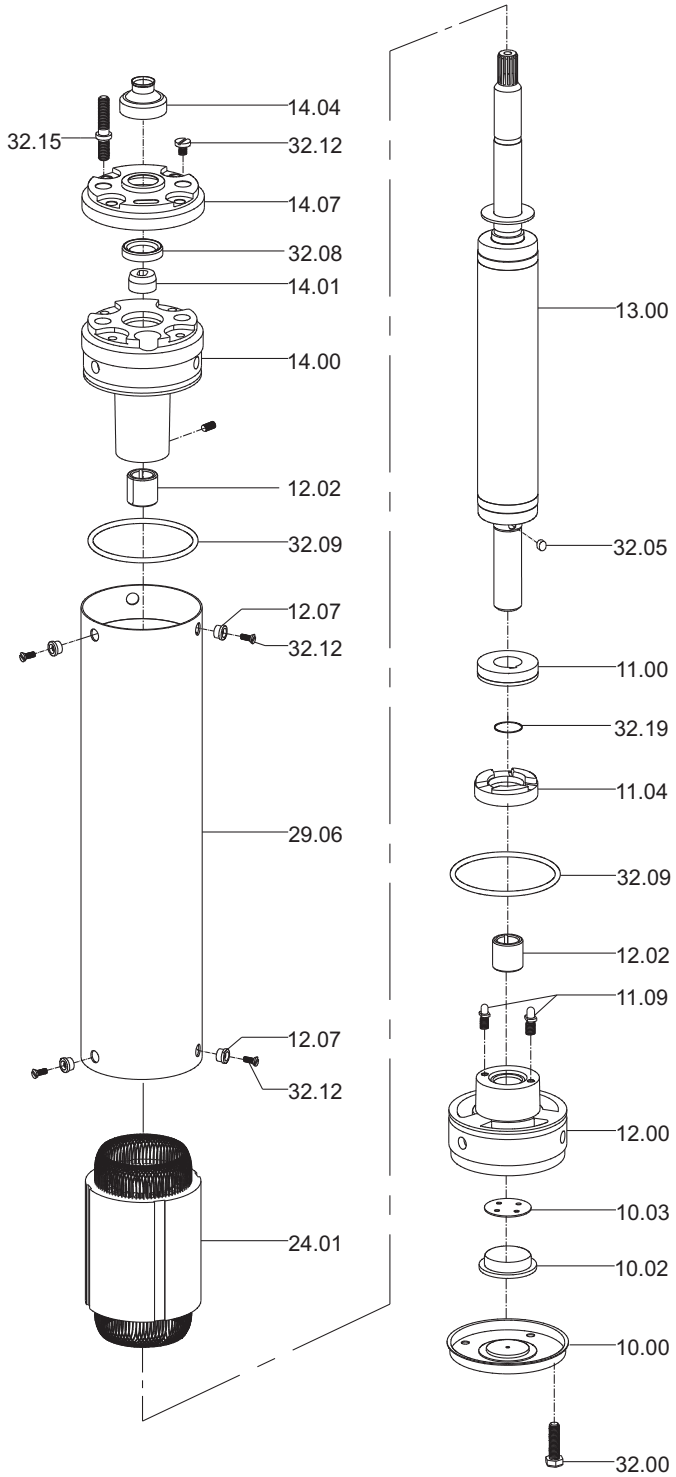

Part No.	Part Name
10.00	Motor Base
10.02	Diaphragm
10.03	Diaphragm Bottom Plate
11.00	Thrust Base
11.04	Thrust Pad
11.09	Rocker Screw
12.00	Lower Housing
12.02	Bush-LTB
12.07	Guide Bush
13.00	Rotor
14.00	Upper Housing
14.01	Cable Grommet
14.04	Sand Guard-Rubber
14.07	Upper Housing Shell
24.01	Wound Stator
29.06	Outer Shell
32.00	Bolt
32.05	Key
32.08	Oil Seal
32.09	O-ring
32.12	Screw
32.15	Stud
32.16	Washer
32.19	O-Ring

In view of continuous developments, the information / descriptions / specifications / illustrations are subject to change without notice.

WATER FILLED REWINDABLE SUBMERSIBLE MOTORS

Nominal Diameter : **4" (4WA) & 6"** 'W' - Series

Exploded View of 6" 'W' Series Motors

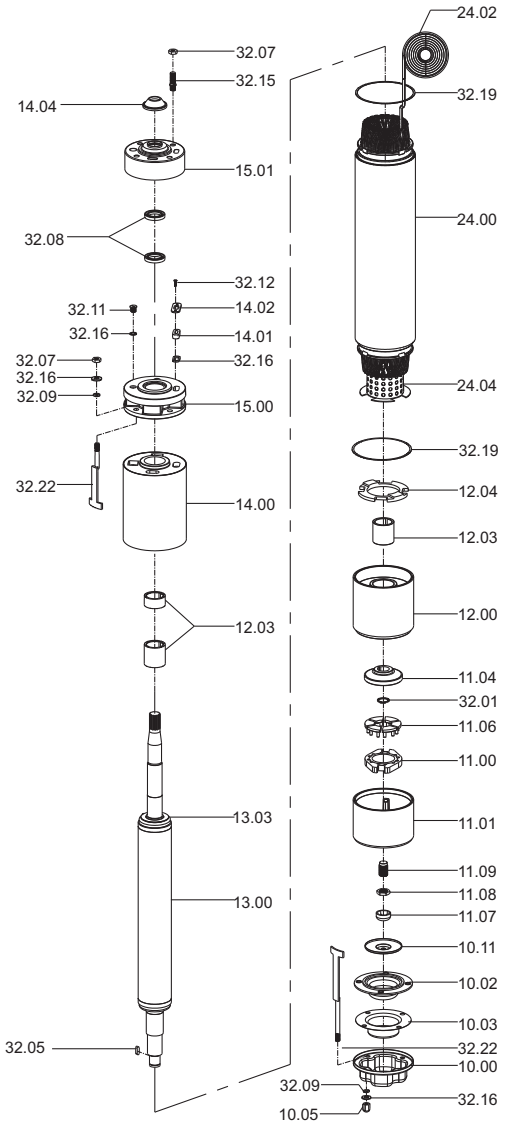

Part No	Descripion
10.00	Motor Base
10.02	Diaphragm
10.03	Diaphragm Bottom Plate
10.04	Diaphragm Plate
10.05	Doom nut
11.00	Thrust Base
11.01	Thrust base Housing
11.04	Thrust Pad
11.06	Thrust Segment
11.07	Rocker Cap
11.08	Rocker Lock nut
11.09	Rocker Screw

Part No	Descripion
12.00	Lower Housing
12.03	Bush-Carbon
12.04	Supporting Ring
13.00	Rotor
13.03	Up Thrust Washer
14.00	Upper Housing
14.01	Cable Grommet
14.02	Cable Grommet Lock Plate
14.04	Sand Guard -Rubber
14.05	Sand Guard-SS/Bakelite
15.00	Oil seal Housing
24.01	Wound Stator

Part No	Descripion
24.02	Cable
24.04	Winding Guard
32.01	Circlip
32.05	Key
32.07	Nut
32.08	Oil seal
32.09	O-ring
32.11	Plug
32.12	Screw
32.15	Stud
32.16	Washer
32.19	Gasket
32.22	Tie Bolt

In view of continuous developments, the information / descriptions / specifications / illustrations are subject to change without notice.

WATER FILLED REWINDABLE SUBMERSIBLE MOTORS

Nominal Diameter :**8"**

'W' - Series

Exploded View of 8" 'W' Series Motors

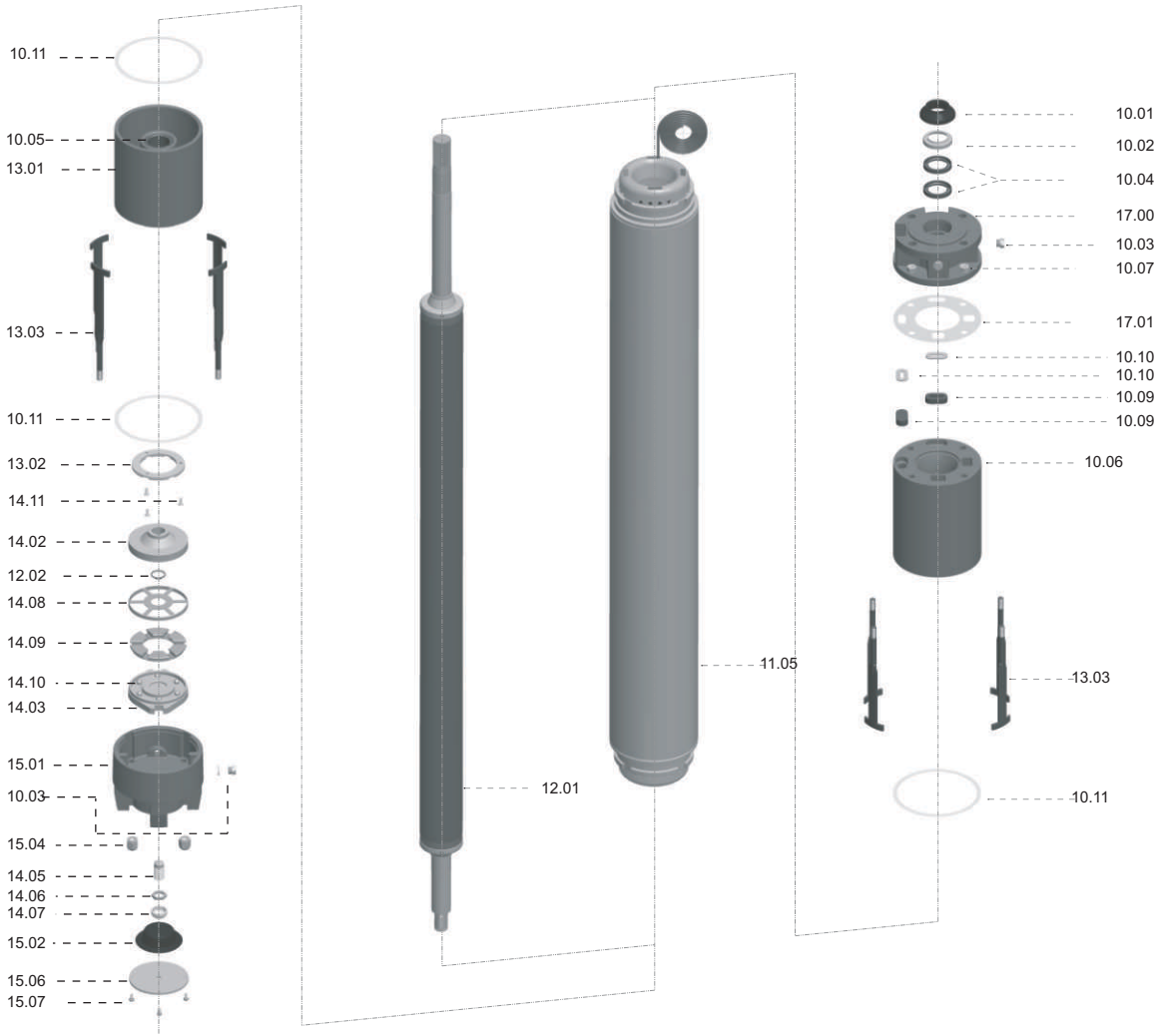

Part No	Descripion
10.01	Sand Guard
10.02	Shaft Seal Guard
10.03	Water Filling Plug / Drain Plug
10.04	Shaft Seal
10.06	Upper Housing
10.07	Nut
10.09	Cable Grommet
10.10	Grommet Plate
10.11	Gasket
11.02	Stator Winding
11.03	Cable

Part No	Descripion
11.05	Body
12.01	Rotor
12.02	Circlip
13.01	Lower Housing
13.02	Counter Thrust Pad
13.03	Tie-bolt
14.02	Thrust Bearing Pad
14.03	Thrust Bearing Base
14.05	Rocker Screw
14.06	Rocker Screw Nut
14.07	Rocker Cap

Part No	Descripion
14.08	Segment Shell
14.09	Thrust Segment
14.10	Half Round Guide
14.11	Pad Key
15.01	Motor Base
15.02	Diaphragm
15.03	Doomnut
15.04	'o' Ring
15.06	Diaphragm Plate
15.07	Bolt
17.00	Oil Seal Housing
17.01	Oil Seal Housing Gasket

In view of continuous developments, the information / descriptions / specifications / illustrations are subject to change without notice.

WATER FILLED REWINDABLE SUBMERSIBLE MOTORS

Nominal Diameter : **4", 6" & 8"** 'W' - Series

Thrust Load Details

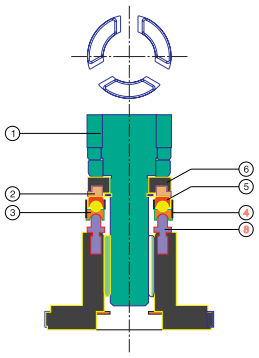

W - 1

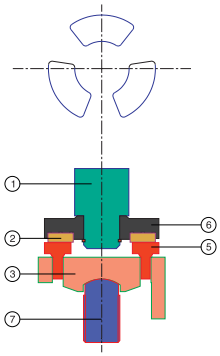

W - 2

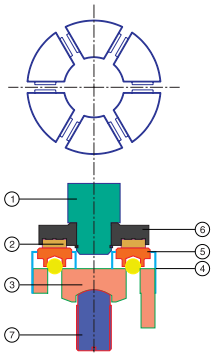

W - 3

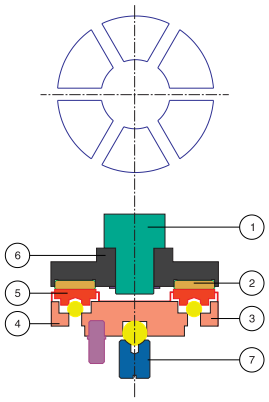

W - 4

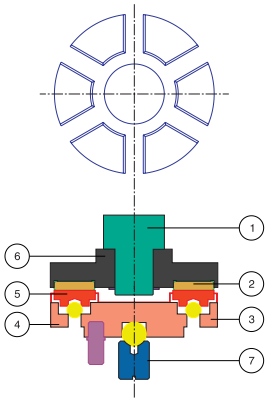

W - 5

Part No.	Part Name	Part No.	Part Name
1.	Shaft	5.	Pivot Shoe
2.	Carbon	6.	Thrust Pad Plate
3.	Thrust Base Plate	7.	Rocker Screw
4.	Thrust Bearing Shell	8.	Rocker Pin

Motor Nominal Dia	HP	Bearing Type	No. of Shoes	Maximum Down Thrust Load
4"	0.5 to 1.5 HP	W - 1	3	3000 N
4"	2.0 to 5.0 HP	W - 2	3	4000 N
4"	7.5 to 10 HP	W - 3	6	6500 N
6"	3 to 30 HP	W - 4	6	15500 N
6"	35 to 50 HP	W - 5	6	27500 N
8"	20 to 25 HP	W - 4	6	27500 N
8"	30 to 100 HP	W - 5	6	45000 N

Shaft extension height and free end play

Motor Nominal Dia	Nominal shaft extension height in mm	Dimension shaft extension height in mm	Free end play in mm	
			min	max
4"	38.00+0.30 -0.00	38.0 to 38.30	1.0	2.0
6"	72.80+0.00 -0.10	72.70 to 72.80	1.0	2.0
8"	101.60+0.00 -0.30	101.30 to101.60	1.0	2.0

Note : During every servicing, the free end play must be checked with the above values. If the shaft extension height measurement differs, the motor thrust bearing could possibly be damaged and should be replaced.

WATER FILLED REWINDABLE SUBMERSIBLE MOTORS

Nominal Diameter : **4", 6" & 8"** 'W' - Series

Dimensional Drawings

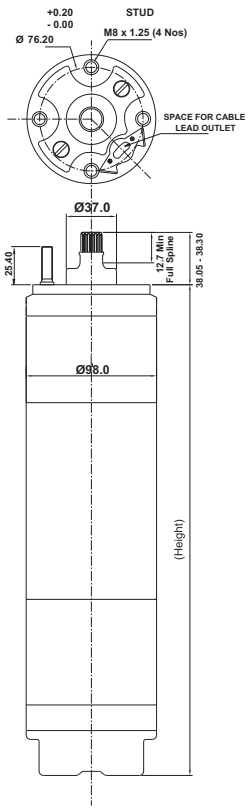

4" Motor

All dimensions are in mm

Splined shaft 14 Teeth - module 1.5875
Pressure angle 30° A.N.S.I.B - 92 - 1 - 1 - 1970
Coupling Class 5

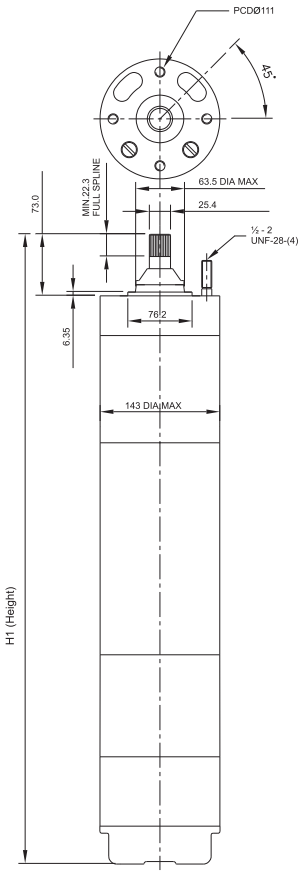

6" Motor

All dimensions are in mm

Splined shaft 15 Teeth - module 1.5875
Pressure angle 30° A.N.S.I.B - 92 - 1 - 1 - 1970
Coupling Class 5

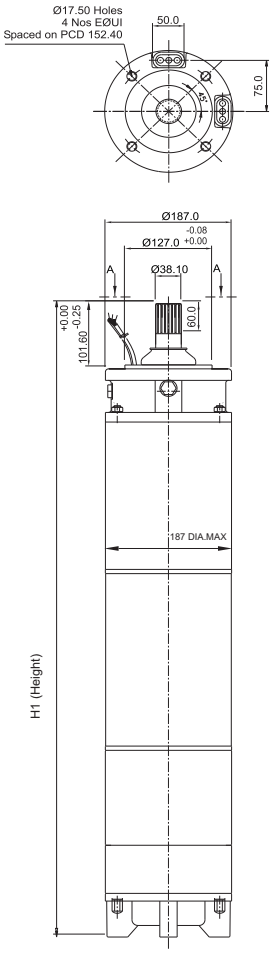

8" Motor

All dimensions are in mm

Splined shaft 23 teeth - module 1.5875
Pressure angle 30° ANSI B92 .1
Tolerance Class 5

In view of continuous developments, the Information / descriptions / Specifications / illustrations are subject to change without notice.

WATER FILLED REWINDABLE SUBMERSIBLE MOTORS

Nominal Diameter : **4"** 'W' - Series

SPECIFICATIONS

Nominal Diameter	4" (100mm)
Maximum Outer Diameter	3.85 inches
Power Range	0.5HP to 7.5HP - 3 Phase
Speed	3450 rpm
Versions	3 Phase - 220 V & 380 V, 60Hz, A.C. Supply
Degree of Protection	IP58
Class of insulation	Y
Direction of Rotation	Electrically Reversible
Type of Duty	S1 (continuous)
Maximum Down Thrust Load	0.5HP to 2HP - 800 lbs / 3500 N 3HP to 5HP - 7.5 HP - 1500lbs / 6500N
Minimum cooling flow along the motor	0.25 ft/sec
Maximum Temperature of Liquid	91.4°F(33°C)
Starts per Hour	20 times
Shaft	Splined as per NEMA standard
Mounting Standard	NEMA standard
Method of Starting	3 Phase - Direct On Line (D.O.L)
Cable Lead out	Permanently Connected and Sealed 3/4 core PVC/Rubber insulated flat Cable

MATERIALS OF CONSTRUCTION

Part Name	Type-A
Housings Shell	S.S - 304
Stator Shell	S.S - 304
Shaft Extension	S.S - 304
Bearing Bush	Graphite Carbon
Thrust Bearing/Pad	S.S - 420 / Graphite Carbon
Motor Base	S.S - 304
Shaft Seal	Nitrile rubber (NBR)
Diaphragm	Nitrile rubber (NBR)

* Type 'N' motors are available upto 1.5HP

Type - A Type - N

220/230/ & 380V, THREE PHASE

APPROX. DIMENSIONS(Inches) & WEIGHTS (lbs)

Motor Model	HP	Lead Out Cable (mm²)		Outer Diameter	Height	Nett Weight
		220 V	380 V			
W4N-05-4D	0.5	1.5	1.5	3.85	17.0	31.4
W4N-07-4D	0.75	1.5	1.5	3.85	18.6	35.9
W4N-10-4D	1	1.5	1.5	3.85	19.8	39.2
W4N-15-4D	1.5	2.5	1.5	3.85	22.0	45.8
W4A-20-4D	2	2.5	1.5	3.85	28.1	59.2
W4A-30-4D	3	2.5	1.5	3.85	28.5	70.4
W4A-40-4D	4	4	2.5	3.85	35.0	79.0
W4A-50-4D	5	4	2.5	3.85	37.9	87.4
W4A-60-4D	6	4	2.5	3.85	45	95.2
W4A-75-4D	7.5	4	2.5	3.85	52	103

The last digit of the model number denotes voltage (D = 220V, E = 230V, I = 380V, M = 460V).

WATER FILLED REWINDABLE SUBMERSIBLE MOTORS

Nominal Diameter : **4"**

'W' - Series

220V, THREE PHASE

TECHNICAL & ELECTRICAL DATA

MODEL	HP	SF	RATED		MAX. S.F.		Efficiency %			Power Factor%			Locked Rotor Amps	Thrust Capacity (lbs)
			Amps	W	Amps	W	S.F	F.L.	3/4	S.F	F.L	3/4		
W4N-05-4D	0.5	1.6	2.3	664	3.1	928	59	56	51	80	75	70	15	650
W4N-07-4D	0.75	1.5	3.6	928	4.3	1264	65	63	57	79	75	64	21	650
W4N-10-4D	1.0	1.4	4	1136	5.5	1600	68	66	60	80	75	68	25	650
W4N-15-4D	1.5	1.3	5.5	1648	7.3	2032	70	69	65	80	77	71	34	650
W4A-20-4D	2.0	1.25	8	2280	9.6	2600	71	69	66	78	75	71	44	650
W4A-30-4D	3.0	1.15	10.4	3120	12	3720	72	72	68	80	78	74	58	1500
W4A-40-4D	4.0	1.15	15	4160	16.8	4720	71	73	70	78	73	70	75	1500
W4A-50-4D	5.0	1.15	16.3	4880	19.5	6200	76	75	71	81	79	72	97	1500
W4A-60-4D	6.0	1.15	19.4	6040	23	6820	76	75	73	82	80	70	115	1500
W4A-75-4D	7.5	1.15	22	7280	27.5	8400	76	75	74	83	80	78	137	1500

230V, THREE PHASE

MODEL	HP	SF	RATED		MAX. S.F.		Efficiency %			Power Factor%			Locked Rotor Amps	Thrust Capacity (lbs)
			Amps	W	Amps	W	S.F	F.L.	3/4	S.F	F.L	3/4		
W4N-05-4E	0.5	1.6	2.2	664	3.0	928	59	56	51	80	75	70	15	650
W4N-07-4E	0.75	1.5	3.4	928	4.1	1264	65	63	57	79	75	64	21	650
W4N-10-4E	1.0	1.4	3.8	1136	5.3	1600	68	66	60	80	75	68	25	650
W4N-15-4E	1.5	1.3	5.3	1648	7.0	2032	70	69	65	80	77	71	34	650
W4A-20-4E	2.0	1.25	7.7	2280	9.2	2600	71	69	66	78	75	71	44	650
W4A-30-4E	3.0	1.15	9.9	3120	11.5	3720	72	72	68	80	78	74	58	1500
W4A-40-4E	4.0	1.15	14.3	4160	16.1	4720	71	73	70	78	73	70	75	1500
W4A-50-4E	5.0	1.15	15.5	4880	18.7	6200	76	75	71	81	79	72	97	1500
W4A-60-4E	6.0	1.15	18.6	6040	22.0	6820	76	75	73	82	80	70	115	1500
W4A-75-4E	7.5	1.15	21.0	7280	26.3	8400	76	75	74	83	80	78	137	1500

380V, THREE PHASE

MODEL	HP	SF	RATED		MAX. S.F.		Efficiency %			Power Factor%			Locked Rotor Amps	Thrust Capacity (lbs)
			Amps	W	Amps	W	S.F	F.L.	3/4	S.F	F.L	3/4		
W4N-05-4I	0.5	1.6	1.6	720	1.9	960	50	47	43	78	77	70	10	800
W4N-07-4I	0.75	1.5	1.9	912	2.4	1296	65	63	57	81	75	65	12	800
W4N-10-4I	1.0	1.4	2.5	1248	3.6	1600	66	64	59	82	75	65	18	800
W4N-15-4I	1.5	1.3	3.4	1728	4.8	2200	67	65	61	81	78	71	24	800
W4A-20-4I	2.0	1.25	4.2	2256	5.8	2600	69	67	64	81	80	76	29	800
W4A-30-4I	3.0	1.15	5.6	3024	7.2	3808	74	72	69	83	82	74	36	1500
W4A-40-4I	4.0	1.15	7.8	4000	9.5	4704	76	75	72	80	78	72	47	1500
W4A-50-4I	5.0	1.15	9.1	4840	11.0	5960	76	75	74	82	81	73	55	1500
W4A-60-4I	6.0	1.15	11.3	6000	13.0	6780	76	75	74	82	81	72	65	1500
W4A-75-4I	7.5	1.15	13.3	7480	16.0	8600	75	74	72	83	80	75	80	1500

In view of continuous developments, the Information / descriptions / Specifications / illustrations are subject to change without notice.

WATER FILLED REWINDABLE SUBMERSIBLE MOTORS

Nominal Diameter : **6"**

'W' - Series

Type - A & B

SPECIFICATIONS

Nominal Diameter	6" (150mm)
Maximum Outer Diameter	5.62 inches
Power Range	3HP & 5HP - 1 Phase
	3HP to 60HP - 3 Phase
Speed	3450 rpm
Versions	1.Phase - 230 V, 60 Hz, A.C. Supply
	3 Phase - 220, 230,380,440,460 & 575 V, 60 Hz, A.C. Supply
Degree of Protection	IP58
Class of insulation	Y
Direction of Rotation	CCW - 1 Phase ; Electrically Reversible - 3 Phase
Type of Duty	S1 (continuous)
Maximum Down Thrust Load	3 to 30 HP - 3500 lbs / 15500 N
	35 to 60 HP - 6000 lbs / 27500 N
Minimum cooling flow along the motor	0.5 ft/sec
Maximum Temperature of Liquid	91.4°F (33°C)
Starts per Hour	20 times
Shaft	Splined as per NEMA standard
Mounting Standard	NEMA standard
Method of Starting	3 to 60 HP - Direct On Line (D.O.L)
	7.5 to 60HP - WYE Delta (S.D)
Cable Leadout	Permanently Connected and Sealed 3/4 core PVC /Rubber insulated flat Cable

Type - A Type - B

MATERIALS OF CONSTRUCTION

Part Name	Type - A	Type - B
Shaft Seal	Nitrile Rubber (NBR)	Nitrile Rubber (NBR)
Mechanical Seal	Ceramic - Carbon	Ceramic - Carbon
Upper & Lower Housings	SS 304	Cast Iron
Stator Shell	SS 304	SS 304
Thrust Pad	Carbon Graphite	Carbon Graphite
Thrust Bearing Segments	SS 420	SS 420
Diaphragm	Nitrile Rubber (NBR)	Nitrile Rubber (NBR)
Motor Base	SS 304	Cast Iron

220/230V, SINGLE PHASE

APPROX. DIMENSIONS(inches) & WEIGHT(lbs)

Motor model	HP	Lead Out Cable(mm²)	Outer Diameter	Height	Nett Weight	Capacitor Values(µf)	
						Start (230V)	Run (440V)
W6A-30-3D	3	2.5	5.62	29.3	114.5	200/250	36+36
W6A-50-3D	5	4.0	5.62	34.4	132.1	200/250	40+40+40

The last digit of the model number denotes voltage (D = 220V, E = 230V, I = 380V, M = 460V).

WATER FILLED REWINDABLE SUBMERSIBLE MOTORS

Nominal Diameter : **6"**

'W' - Series

Type - A & B

220V, SINGLE PHASE — **TECHNICAL & ELECTRICAL DATA**

Motor model	HP	SF	RATED		MAX. S.F.		Efficiency			Power Factor			Locked Rotor Amps	Thrust Capacity (lbs)
			A	W	A	W	S.F.	F.L.	3/4	S.F.	F.L.	3/4		
W6A-30-3D	3	1.15	15	3150	17.1	3620	70	70	68	95	95	92	83	3500
W6A-50-3D	5	1.15	25	5200	28.5	5940	72	71	70	94	94	91	115	3500

230V, SINGLE PHASE — **TECHNICAL & ELECTRICAL DATA**

Motor model	HP	SF	RATED		MAX. S.F.		Efficiency %			Power Factor %			Locked Rotor Amps	Thrust Capacity (lbs)
			A	W	A	W	S.F.	F.L.	3/4	S.F.	F.L.	3/4		
W6A-30-3	3	1.15	14.5	3150	16.5	3620	70	70	68	95	95	92	83	3500
W6A-50-3	5	1.15	24	5200	27.5	5940	72	71	70	94	94	91	115	3500

220/230V, THREE PHASE — **APPROX. DIMENSIONS (inches) & WEIGHT(lbs)**

Motor Model	HP	Lead Out Cable (mm^2)	Outer Diameter	Height	Nett Weight
W6A-50-4D	5	4.0	5.62	27.9	110.1
W6A-55-4D	5.5	4.0	5.62	28.6	115.0
W6A-75-4D	7.5	6.0	5.62	30.0	127.7
W6A-100-4D	10	6.0	5.62	35.9	142.7
W6A-125-4D	12.5	10.0	5.62	35.3	150.0
W6A-150-4D	15	10.0	5.62	36.8	173.7
W6A-200-4D	20	10.0	5.62	41.5	200.0
W6A-250-4D	25	16.0	5.62	45.7	219.0
W6A-300-4D	30	16.0	5.62	48.1	253.0

Type - A Type - B

220V, THREE PHASE — **TECHNICAL & ELECTRICAL DATA**

MODEL	HP	SF	RATED		MAX. S.F.		EFF. %			Power Factor %			Locked Rotor Amps	Max. Down Thrust Load (lbs)
			A	W	A	W	S.F	F.L.	3/4	S.F	F.L	3/4		
W6A-50-4D	5	1.15	16	4840	18.5	5480	77.5	76.6	76.5	80.9	78.6	76.1	88	3500
W6A-75-4D	7.5	1.15	22	6850	25	7860	80	80.5	79.6	82.5	81.7	77.0	130	3500
W6A-100-4D	10	1.15	29.5	9280	33.9	10640	82	81.5	80.0	82.5	82.5	79.0	175	3500
W6A-125-4D	12.5	1.15	36	11360	41	13020	80.5	81.8	80.6	83.3	82.8	80.0	216	3500
W6A-150-4D	15	1.15	44	13620	49	15400	80.5	80.8	80.2	82.5	81.2	80.5	265	3500
W6A-200-4D	20	1.15	56	18180	64.4	20940	82	82.5	80.0	85.3	85.2	82.0	348	3500
W6A-250-4D	25	1.15	68	22680	78.2	26000	82.5	82.2	81.5	87.2	87.5	83.0	468	3500
W6A-300-4D	30	1.15	80.5	26880	92	30600	82.5	82.0	82.0	83.5	84.0	82.0	547	3500
W6A-400-4D	40	1.15	116	36240	133	41700	82.5	82.8	80.0	82.3	82.0	80.0	750	6000

The last digit of the model number denotes voltage (D = 220V, E = 230V, I = 380V, M = 460V).

In view of continuous developments, the Information / descriptions / Specifications / illustrations are subject to change without notice.

WATER FILLED REWINDABLE SUBMERSIBLE MOTORS

Nominal Diameter : **6"**

'W' - Series

230V, THREE PHASE

TECHNICAL & ELECTRICAL DATA

Type - A & B

MODEL	HP	SF	RATED		MAX. S.F.		EFF. %			Power Factor %			Locked Rotor Amps	Max. Down Thrust Load (lbs)
			A	W	A	W	S.F	F.L.	3/4	S.F	F.L	3/4		
W6A-50-4E	5	1.15	15	4840	16.8	5480	77.5	76.6	76.5	80.9	78.4	76.1	82	3500
W6A-75-4E	7.5	1.15	21	6840	24	7860	80.5	80.4	79.6	82.2	81.7	76.5	125	3500
W6A-100-4E	10	1.15	28.6	9280	32.5	10640	82	81.2	80	82.1	80.3	78.5	168	3500
W6A-125-4E	12.5	1.15	36	11600	40	13320	80.5	80.1	79.5	83.5	80.8	78.8	210	3500
W6A-150-4E	15	1.15	41	13620	46.5	15660	80.5	80.8	80.2	84.5	83.4	79.4	258	3500
W6A-200-4E	20	1.15	56	18180	64	20940	82	82.0	80	86.2	83.5	79.8	324	3500
W6A-250-4E	25	1.15	66	22620	75	25800	82	82.5	82	86.5	86	81	450	3500
W6A-300-4E	30	1.15	80	26880	92	30600	82.5	82	82	83.5	84	82	520	3500
W6A-400-4E	40	1.15	112	36240	129	41700	82.5	82.8	80	82.3	82	80	700	6000

380V, THREE PHASE

APPROX. DIMENSIONS (inches) & WEIGHT(lbs)

Motor Model	HP	Lead Out Cable (mm²)	Outer Diameter	Height	Nett Weight
W6A-30-4I	3	2.5	5.62	26.2	98.0
W6A-40-4I	4	2.5	5.62	27.0	106.0
W6A-50-4I	5	2.5	5.62	28.0	110.0
W6A-55-4I	5.5	2.5	5.62	28.0	112.0
W6A-60-4I	6.0	4.0	5.62	29.5	115.0
W6A-75-4I	7.5	4.0	5.62	31.3	122.3
W6A-100-4I	10	4.0	5.62	34.5	140.5
W6A-125-4I	12.5	6.0	5.62	36.5	155.2
W6A-150-4I	15	10.0	5.62	39.0	171.5
W6A-175-4I	17.5	10.0	5.62	40.9	185.0
W6A-200-4I	20	10.0	5.62	42.8	198.5
W6A-250-4I	25	10.0	5.62	45.7	215.8
W6A-300-4I	30	10.0	5.62	48.1	232.0
W6A-350-4I	35	16.0	5.62	50.2	246.0
W6A-400-4I	40	16.0	5.62	52.3	260.2
W6A-500-4I	50	16.0	5.62	53.5	265.0

Type - A Type - B

380V, THREE PHASE

TECHNICAL & ELECTRICAL DATA

MODEL	HP	SF	RATED		MAX. S.F.		Efficiency %			Power Factor%			Locked Rotor Amps	Thrust Capacity (lbs)
			Amps	W	Amps	W	S.F	F.L.	3/4	S.F	F.L	3/4		
W6A-60-4I	6	1.15	11	6000	13	6900	76	75	74	83	82	82	55	3500
W6A-75-4I	7.5	1.15	13.5	7200	15.5	8520	77	76	76	86	85	85	66	3500
W6A-100-4I	10	1.15	17.1	9640	19.5	10900	79	78	78	88	87	85	84	3500
W6A-125-4I	12.5	1.15	20.2	11800	23	13580	80	79	79	89	87	87	104	3500
W6A-150-4I	15	1.15	24.6	13680	28	15500	82	81	80	84	83	82	132	3500
W6A-200-4I	20	1.15	33	18850	37.5	21580	80	80	80	87	86	85	180	3500
W6A-250-4I	25	1.15	37.5	21760	43	25000	85	86	85	90	91	89	230	3500
W6A-300-4I	30	1.15	47.5	25920	54.6	29600	85	86	85	84	84	83	300	3500
W6A-400-4I	40	1.15	65	36000	75	41300	83.5	84	83.6	83.5	84	81	380	6000
W6A-500-4I	50	1.15	83	44640	95	51320	83	83	82.5	82	82	81	450	6000

The above mentioned electrical data are applicable for Wye-Delta (SD) motors also
Note: Wye-Delta motors are available from 7.5 H.P. onwards.

WATER FILLED REWINDABLE SUBMERSIBLE MOTORS

Nominal Diameter : **6"**

'W' - Series

Type - A & B

460V, THREE PHASE

APPROX. DIMENSIONS (inches) & WEIGHT (lbs)

Motor Model	HP	Lead Out Cable (mm²)	Outer Diameter	Height	Nett weight DOL
W6A-30-4M	3	2.5	5.62	26.2	98.2
W6A-40-4M	4	2.5	5.62	27	106.1
W6A-50-4M	5	2.5	5.62	28.0	107.4
W6A-55-4M	5.5	2.5	5.62	28	112.2
W6A-60-4M	6	4.0	5.62	29.5	115.1
W6A-75-4M	7.5	4.0	5.62	31.3	122.3
W6A-100-4M	10	4.0	5.62	34.5	141.3
W6A-125-4M	12.5	6.0	5.62	36.5	155.9
W6A-150-4M	15	10.0	5.62	39.0	171.6
W6A-175-4M	17.5	6	5.62	40.9	246.4
W6A-200-4M	20	10.0	5.62	42.8	198.4
W6A-250-4M	25	10.0	5.62	45.7	215.2
W6A-300-4M	30	10.0	5.62	48.1	231.1
W6A-350-4M	35	16.0	5.62	50.5	242.5
W6A-400-4M	40	16.0	5.62	52.3	260.0
W6A-500-4M	50	16.0	5.62	53.5	264.5
W6A-600-4M	60	16.0	5.62	54.3	267

Type - A Type - B

460V, THREE PHASE **TECHNICAL & ELECTRICAL DATA**

MODEL	HP	SF	RATED		MAX. S.F.		EFF. %			Power Factor %			Locked Rotor Amps	Max. Down Thrust Load (lbs)
			Amps	W	Amps	W	S.F	F.L.	3/4	S.F	F.L	3/4		
W6A-50-4M	5	1.15	7.9	4680	8.5	5120	80.5	79	77.5	76	78.5	75.9	38	3500
W6A-60-4M	6	1.15	9	5900	10.5	6720	81	82	80	83	82	78	48	3500
W6A-75-4M	7.5	1.15	11	7000	12.5	8050	78	79	78.5	81	80	79.5	60	3500
W6A-100-4M	10	1.15	14	9260	16	10600	80	81	80	82	78	77	78	3500
W6A-125-4M	12.5	1.15	17.6	11680	19.8	13400	79.8	80	79.5	84	82	81.5	90	3500
W6A-150-4M	15	1.15	21	13200	23.5	15300	82.5	83	82	81.7	80	79	120	3500
W6A-200-4M	20	1.15	27	18200	31	20800	82	82.5	82	88	86	85.5	165	3500
W6A-250-4M	25	1.15	33	22320	37	25600	82.5	83	82.2	86.8	82.5	82	220	3500
W6A-300-4M	30	1.15	38.8	26750	44.5	30750	82.5	83.5	82	86.5	85	82	260	3500
W6A-350-4M	35	1.15	48	31200	55	35800	82	84	82	82	82	81.5	290	6000
W6A-400-4M	40	1.15	53.5	35760	61.5	41160	83.5	84	83.5	83.3	83.8	83	330	6000
W6A-500-4M	50	1.15	67	44160	77	51500	83	84.5	84	84	83	80	390	6000
W6A-600-4M	60	1.15	85.5	56400	98	65600	84	82	81	84	83	80	480	6000

The above mentioned electrical data are applicable for Wye-Delta (SD) motors also

Note: Wye-Delta motors are available from 7.5 H.P. onwards.

In view of continuous developments, the Information / descriptions / Specifications / illustrations are subject to change without notice.

WATER FILLED REWINDABLE SUBMERSIBLE MOTORS

Nominal Diameter : **6"**

'W' - Series

Type - A & B

575V, THREE PHASE

APPROX. DIMENSIONS (inches) & WEIGHT(lbs)

Motor Model	HP	Lead Out Cable (mm²)	Outer Diameter	Height	Nett Weight
W6A-30-4P	3	2.5	5.62	26.2	99.0
W6A-50-4P	5	2.5	5.62	28.0	108.0
W6A-75-4P	7.5	4.0	5.62	31.3	122.8
W6A-100-4P	10	4.0	5.62	34.5	141.5
W6A-125-4P	12.5	6.0	5.62	36.5	156.5
W6A-150-4P	15	6.0	5.62	39.0	171.9
W6A-200-4P	20	10.0	5.62	42.8	198.8
W6A-250-4P	25	10.0	5.62	45.7	215.6
W6A-300-4P	30	10.0	5.62	48.1	231.5
W6A-400-4P	40	16.0	5.62	52.3	261.2

575V, THREE PHASE

TECHNICAL & ELECTRICAL DATA

MODEL	HP	SF	RATED		MAX. S.F.		EFF. %			Power Factor%			Locked Rotor Amps	Max. Down Thrust Load (lbs)
			Amps	W	Amps	W	S.F	F.L.	3/4	S.F	F.L	3/4		
W6A-30-4P	3	1.15	3.7	3000	4.2	3450	74	73.3	73	76.9	75.3	72	22	3500
W6A-50-4P	5	1.15	6.2	4800	7	5520	77.1	77	76.5	78.1	77.7	77	31	3500
W6A-75-4P	7.5	1.15	8.8	7260	10	8340	75.8	75.7	74.5	82.3	81.7	80.5	48	3500
W6A-100-4P	10	1.15	11.5	9200	12.8	10520	82	81.5	81	82.5	80.5	80	67	3500
W6A-125-4P	12.5	1.15	14.6	11280	16.8	12920	83	82.5	82	77.2	80	77	85	3500
W6A-150-4P	15	1.15	17	13160	19	15400	83.2	83.5	82	81	78	76	98	3500
W6A-200-4P	20	1.15	22	17900	25	20560	84	83.8	82	82.5	81.7	77	130	3500
W6A-250-4P	25	1.15	27	22160	30	25460	83.5	83.5	82.6	85.2	84	79.5	165	3500
W6A-300-4P	30	1.15	32.5	26560	37	30520	83	82.8	81.8	82.8	80.8	77.5	200	3500
W6A-400-4P	40	1.15	43	36000	49.5	41400	83.3	83.3	82.4	83.9	84	82.5	280	6000

The above mentioned electrical data are applicable for Wye-Delta (SD) motors also

Note: Wye-Delta motors are available from 7.5 H.P. onwards.

Type - A Type - B

WATER FILLED REWINDABLE SUBMERSIBLE MOTORS

Nominal Diameter : **8"**

'W' - Series

Type - A & B

SPECIFICATIONS

Nominal Diameter	8" (200mm)
Maximum Outer Diameter	7.36 inches, (75 & 100HP - 7.63 inches)
Power Range	50HP to 125HP - 3 Phase
Speed	3450 rpm
Versions	3 Phase - 380V & 460 V, 60 Hz, A.C. Supply
Degree of Protection	IP58
Direction of Rotation	Electrically Reversible
Type of Duty	S1 (continuous)
Maximum Down Thrust Load	50 - 60HP - 10000 lbs / 45500 N 75 - 125 HP , 12500 lbs / 55600 N
Minimum Cooling Flow Along the Motor	0.5 ft/sec
Maximum Temperature of Liquid	91.4°F (33°C)
Starts per Hour	10 times
Shaft	Splined as per NEMA standard
Mounting Standard	NEMA standard
Method of Starting	50 to 125HP Direct On Line (D.O.L) 50 to 125HP WYE- Delta (S.D)
Cable Leadout Flat Cable	Permanently Connected and Sealed 3/4 core insulated PVC/Rubber insulated flat Cable

Type - A **Type - B**

MATERIALS OF CONSTRUCTION

Part Name	Type - A	Type - B
Shaft Seal Housing	SS 304 - Casted	Cast Iron
Shaft Seal	Nitrile Rubber (NBR)	Nitrile Rubber (NBR)
Mechanical Seal	Ceramic - Carbon	Ceramic - Carbon
Upper & Lower Housings	SS 304	Cast Iron
Stator Shell	SS 304	SS 304
Thrust Pad	Carbon Graphite	Carbon Graphite
Thrust Bearing Segments	SS 420	SS 420
Diaphragm	Nitrile Rubber (NBR)	Nitrile Rubber (NBR)
Motor Base	SS 304 - Casted	Cast Iron

In view of continuous developments, the Information / descriptions / Specifications / illustrations are subject to change without notice.

WATER FILLED REWINDABLE SUBMERSIBLE MOTORS

Nominal Diameter : **8"** Type - B 'W' - Series

Type - A & B

460V, THREE PHASE

DIMENSIONS (inches) & WEIGHT (lbs)

Motor Model	HP	Lead Out Cable (mm²)	Outer Diameter	Height	Nett Weight
W8B-500-4M	50	16.0	7.36	49.1	352.0
W8B-600-4M	60	16.0	7.36	51.5	367.4
W8B-750-4M	75	35.0	7.63	57.8	442.2
W8B-A00-4M	100	35.0	7.63	69.7	552.2
W8B-A25-4M	125	35.0	7.63	74.8	611.6

460V, THREE PHASE

TECHNICAL & ELECTRICAL DATA

MODEL	HP	SF	RATED		MAX. S.F.		Efficiency %			Power Factor%			Locked Rotor Amps	Thrust Capacity (lbs)
			Amps	W	Amps	W	S.F	F.L.	3/4	S.F	F.L	3/4		
W8B-500-4M	50	1.15	67	43200	74	50400	88	88	87	86	85	80	420	10000
W8B-600-4M	60	1.15	80	52200	90	60400	89	89	88	87	86	82	520	10000
W8B-750-4M	75	1.15	109	65280	125	75000	85	86	84	81	81	80	670	12500
W8B-A00-4M	100	1.15	135	87400	145	100510	86	85	84	86	86	81	900	12500
W8B-A25-4M	125	1.15	150	105600	175	126800	87	86	85	90	88	87	1100	12500

Type - A Type - B

The above mentioned electrical data are applicable for Wye-Delta (SD) motors also

Note: Wye-Delta motors are available from 7.5 H.P. onwards.

CONVERSION TABLE

FLOW RATE

US-GPM	lps	lpm	m^3/h	ft^3/h	ft^3/min	imp - GPM	US - barrel / day
1	0.063	3.785	0.2271	8.0209	0.1337	0.833	34.286
15.850	1	60	3.6	127.133	2.1189	13.2	543.439
0.264	0.017	1	0.06	2.1189	0.0353	0.22	9.057
4.403	0.278	16.667	1	35.3147	0.5886	3.666	150.955
0.125	0.008	0.472	0.0283	1	0.0167	0.104	4.275
7.48	0.472	28.317	1.6990	60	1	6.229	256.475
1.201	0.076	4.546	0.2728	9.6326	0.1605	1	41.175
0.029	0.002	0.110	0.0066	0.2339	0.0039	0.024	1

LIQUID

US-Gallon	m^3	Litre (L)	Milliliter (ml)	Imp. Gallon	ft^3
1	0.00378	3.785	3785	0.8327	0.1337
264.2	1	1000	$1X10^6$	220	35.3147
0.2642	0.001	1	1000	0.22	0.0353
$2.642X10^{-4}$	$1X10^{-6}$	0.001	1	$2.2X10^{-4}$	$3.53X10^{-5}$
1.201	0.00455	4.546	4546	1	0.1605
7.4805	0.0283	28.317	28317	6.2288	1

LIQUID HEAD AND PRESSURE

Psi	N/m^2 (Pa)	kPa	bar	Kgf/cm^2	foot for water ft H_2O	Meter of water m H_2O	Millimeter of Mercury mm Hg	Inch of Mercury in Hg
1	6895	6.895	0.069	0.0703	2.31	0.703	51.72	2.036
$1.45X10^{-4}$	1	0.001	$1X10^{-5}$	$1.02X10^{-5}$	$3.35X10^{-4}$	$1.02X10^{-4}$	0.0075	$2.95X10^{-4}$
0.145	1000	1	0.01	0.0102	0.335	0.102	7.5	0.295
14.5	$1X10^5$	100	1	1.02	33.52	10.2	750.1	29.53
14.22	98.067	98.07	0.981	1	32.81	10	735.6	28.96
0.433	2984	2.984	0.030	0.0305	1	0.305	22.42	0.882
1.42	9789	9.789	0.098	0.1	3.28	1	73.42	2.891
0.019	133.3	0.133	0.0013	0.0014	0.045	0.014	1	0.039
0.491	3386	3.386	0.0338	0.0345	1.133	0.0345	25.4	1

LENGTH

Inch (in)	Millimeter (mm)	Centimeter (cm)	Meter (m)	Foot (ft)	Yard (yd)
1	25.4	2.54	0.0254	0.0833	0.0278
0.0394	1	0.10	0.001	0.0033	0.0011
0.3937	10	1	0.01	0.0328	0.0109
39.3701	1000	100	1	3.2808	1.0936
12	304.8	30.48	0.3048	1	0.3333
36	914.4	91.44	0.9144	3	1

1 kilometer = 1000 metre = 0.62137 mile; 1 mile = 1609.34 metre = 1.60934 kilometre

MASS

Pound (lb)	Kilogram (kg)	Hundred Weight (cwt)	Tonne (t)	Ton long (tn)	short Ton (sh tn)
1	0.454	0.0089	$4.54x10^{-4}$	$4.46x10^{-4}$	$5.0x10^{-4}$
2.205	1	0.0197	0.001	$9.84x10^{-4}$	0.0011
112	50.802	1	0.0508	0.05	0.056
2204.6	1000	19.684	1	0.9842	1.1023
2240	1016	20	1.0161	1	1.1020
2000	907.2	17.857	0.9072	0.8929	1

TEMPERATURE

To Convert From	To	Use Formula
Celsius, tC	Kelvin, tK	tK = tC + 273.15
Fahrenheit, tF	Kelvin, tK	tK = (tF + 459.67) / 1.8
Celsius, tC	Fahrenheit, tF	tF = 1.8 tC + 32
Fahrenheit, tF	Celsius, tC	tC = (tF - 32) / 1.8
Kelvin, tK	Celsius, tC	tC = tK - 273.15
Kelvin, tK	Fahrenheit, tF	tF = 1.8 tK - 459.67

CABLE SELECTION TABLE

	1 Ph, 230 V, 2/3 WIRE MOTORS, MAXIMUM LENGTH OF COPPER CABLE IN FEET														
	CABLE SIZE IN AMERICAN WIRE GAGE														
VOLT	HP	14	12	10	8	6	4	3	2	1	0	00		000	0000
230 V 60Hz 1Phase	0.33	541	869	1381	2179	3389	5243	6510	7950	9679	11759	-	MAXIMUM LENGTH IN FEET	-	-
	0.5	390	640	1007	1601	2500	3872	4800	5870	7159	8411	-		-	-
	0.75	289	469	751	1191	1860	2881	3570	4360	5319	6460	7861		-	-
	1.0	240	390	620	981	1529	2369	2950	3603	4400	5351	6510		-	-
	1.5	180	295	469	761	1192	1860	2310	2841	3491	4269	5230		-	-
	2.0	141	240	381	610	961	1519	1900	2349	2920	3609	4469		-	-
	3.0	112	180	289	459	742	1181	1480	1841	2310	2881	3603		-	-
	5.0	0	0	180	279	449	699	879	1099	1381	1729	2159		2672	-
	7.5	0	0	0	190	299	479	600	742	919	1129	1398		1710	-
	10	0	0	0	0	240	381	489	591	742	919	-		1420	1751

HP	3 Ph, 460 V, 3 WIRE (DOL) MOTORS, MAXIMUM LENGTH OF COPPER CABLE IN FEET																	
	CABLE SIZE IN AMERICAN WIRE GAGE													MCM Copper Wire Size				
	14	12	10	8	6	4	3	2	1	0	00	000	0000	250	300	350	400	500
0.5	3770	6020	9460															
0.75	2730	4350	6850															
1	2300	3670	5770	9070														
1.5	1700	3710	4270	6730														
2	1300	2070	3270	5150	8050													
3	1000	1600	2520	3970	6200													
5	590	950	1500	2360	3700	5750												
7.5	420	680	1070	1690	2640	4100	5100	6260	7180									
10	310	500	790	1250	1960	3050	3800	4680	5750	7050								
15		340	540	850	1340	2090	2600	3200	3930	4810	5900	7110						
20			410	650	1030	1610	2000	2470	3040	3730	4580	5530						
25				530	830	1300	1620	1990	2450	3010	3700	4470	5430					
30				430	680	1070	1330	1640	2030	2490	3060	3700	4500	5128	5850			
40					500	790	980	1210	1490	1830	2250	2710	3192	3720	4242			
50						640	800	980	1210	1480	1810	2190	2650	2998	3409	3830	4171	4842
60						540	670	830	1020	1250	1540	1850	2240	2532	2881	3230	3529	4188
75								680	840	1030	1260	1520	1850	2088	2390	2688	2940	3428
100									620	760	940	1130	1380	1550	1782	2000	2182	2540
125											740	890	1000	1209	1381	1549	1691	1949
150												760	920	1040	1182	1330	1452	1680
175													810	921	1052	1181	1292	1501
200														802	910	1018	1122	1300

CABLE SELECTION TABLE

HP	3 Ph, 460 V, 6 WIRE (Wye Delta) MOTORS, MAXIMUM LENGTH OF COPPER CABLE IN FEET																	
	CABLE SIZE IN AMERICAN WIRE GAGE													MCM Copper Wire Size				
	14	12	10	8	6	4	3	2	1	0	00	000	0000	250	300	350	400	500
5	880	1420	2250	3450	5550	8620												
7.5	630	1020	1600	2530	3960	6150	7650	9390										
10	460	750	1180	1870	2940	4570	5700	7020	8620									
15	310	510	810	1270	2010	3130	3900	4800	5800	7210	8850							
20	230	380	610	970	1540	2410	3000	3700	4560	5590	6870	8290						
25	190	310	490	790	1240	1950	2430	2980	3670	4510	5550	6700	8140					
30		250	410	640	1020	1600	1990	2460	3040	3730	4590	5550	6750	7690	8730			
40			300	480	750	1180	1470	1810	2230	2740	3370	4080	4930	5590	6370			
50				370	590	960	1200	1470	1810	2220	2710	3280	3970	4510	5130	5740	6270	7270
60				320	500	810	1000	1240	1530	1870	2310	2770	3360	3810	4330	4860	5310	6510
75					420	660	810	1020	1260	1540	1890	2280	2770	3150	3600	4050	4420	5160
100						500	610	760	930	1140	1410	1690	2070	2340	2680	3010	3280	3820
125							470	590	730	880	1110	1330	1500	1830	2080	2340	2550	2940
150								510	630	770	950	1140	1380	1570	1790	2000	2180	2530
175									550	680	830	1000	1220	1390	1580	1780	1950	2270
200										590	730	880	1070	1210	1380	1550	1690	1970

These are maximum length of cable in feet from POWER SOURCE TO MOTOR. Exceeding these length will void motor warranty

N O T E S :

W I N N I N G W A Y S

When you have a good thing going it is quite in the fitting of things that recognitions come our way. Several prestigious awards, which decorate our shelf, say it all. These rewards not only acknowledge our position as a leader in the water pump industry but also serve as reminders about what the customer expects from a winner. And we, as ever, have our ears perfectly tuned to customer expectations.

C.R.I. PUMPS (PVT) LIMITED

(International Division)
7/46-1, Keeranatham Road, Saravanampatty, Coimbatore - 641 035. INDIA. Phone : +91-422-3911610, 3911612
Fax : +91-422-3911600 e-mail : cri@criexports.com website: www.cripumps.com

C.R.I. PUMPS S.A. (PTY) LIMITED

P.O. Box 6292, Halfway House, Midrand - 1685, Johannesburg,
South Africa. Tel : +27-11-8058631 / 32 Fax : +27-11-8058630
e-mail : cri@cripumps.co.za website : www.cripumps.co.za

C.R.I. POMPA SANAYİ VE TİCARET LİMİTED ŞİRKETİ

10032 Sk. No:12 A.O.S.B. 35620 Çiğli-İzmir-Türkiye.
Tel:+90-232-328 22 99 Fax:+90-232-328 23 33
E-mail: cri@cripompa.com Website: www.cripompa.com

C.R.I. PUMPS (FZE)

P.O. Box 7988, A4-40 SAIF-Zone, Sharjah, U.A.E.
Tel : +971-6-5573041 (3 Lines), Fax : +971-6-5573042
e-mail : cripumps@eim.ae

C.R.I. BOMBAS HIDRÁULICAS LTDA

Av. Rodrigo Fernando Grillo, 457, Jd. Manacas,
CEP - 14.801-534, Araraquara - SP, Brasil.
Fone : +55-16-3331 1099, Fax +55-16-3331 5344
e-mail : cri@cribombas.com.br website : www.cribombas.com.br

BOMBAS C.R.I. ESPAÑA, S.L.,

Poligono Industrail El.Bony Calle 31, No.137, 46470 Catarroja(Valencia) Spain.
Tel: +34-96 1842 974 Fax: +34-96 1842 977
Email: cri@bombascri.es Website: www.bombascri.es

EB-SM6-07/11-E2